MANUFACTURER OF EARTHMOVING ATTACHMENTS | VERSIONS: 1.0C

BLACKHAWK BRUSH CUTTER

OPERATION AND MAINTENANCE MANUAL

NORM ENGINEERING

BRISBANE
PH: 07 3376 3177
SALES@NORMENG.COM.AU
787 BOUNDARY ROAD
DARRA QLD 4076

MELBOURNE
PH: 03 9775 1965
VICSALES@NORMENG.COM.AU
2/45 FRANKSTON GARDENS DRIVE
CARRUM DOWNS VIC 3201

SYDNEY
PH: 02 7246 7838
NSWSALES@NORMENG.COM.AU
2/3 CONTAPLAS STREET
ARNDELL PARK NSW 2148

NEW ZEALAND
PH: +64 7 889 7080
SERVICE@NORMENG.CO.NZ
14/2582 STATE HIGHWAY 26
MORRINSVILLE 3372

Contents

1 Introduction 4
2 Safety Definitions: Terms and Symbols 5
3 Safety Instructions 6
3.1 Important Points 8
4 Predelivery 9
4.1 Check Pickup Fit 9
4.2 Check Range of Motion 9
4.3 Check Hydraulic Hoses 10
4.4 Hydraulic Motor Running-in 10
5 Assembly Instructions 11
5.1 Hitching Up the 6ft Blackhawk brush cutter 11
5.2 Removing the 6ft Blackhawk brush cutter 12
6 Operating Instructions 13
6.1 Starting the Brush cutter 13
6.2 Specified Operations and Limitations 13
6.3 Auxilary Hydraulic Requirements 14
6.3.1 Connecting the Case Drain 14
6.4 utilising the gauges 15
6.4.1 Pressure gauge only 15
6.4.2 tachometer and Pressure gauge 15
6.5 Reasonably Forseeable Misuse 16
6.6 Cutting Technique 17
6.7 height adjustment 19
7 Maintenance and Care 20
7.1 Hydraulics 20
7.2 Prior to Use 20
7.3 Routine Inspection (Every 12 Weeks) 21
7.4 BEARING ADAPTER Maintenance 21
7.5 Cutting System Mantenance 22

Copyrights © 2025 Norm Engineering

7.5.1 Blade Removal 22
7.5.2 Blade Installation 23
7.5.3 Disc Disassembly 25
7.5.4 Disc Assembly & Installation 26
8 Risk Assessment 28
9 Parts 35
9.1 Ordering Parts 35
9.1.1 Reference Information 35
10 Parts List 36
11 Appendices 42
11.1 Safety Sign Locations 42
12 Warranty 44
12.1 Definition 44
12.2 Warranty 44

Copyrights © 2025 Norm Engineering

1 INTRODUCTION

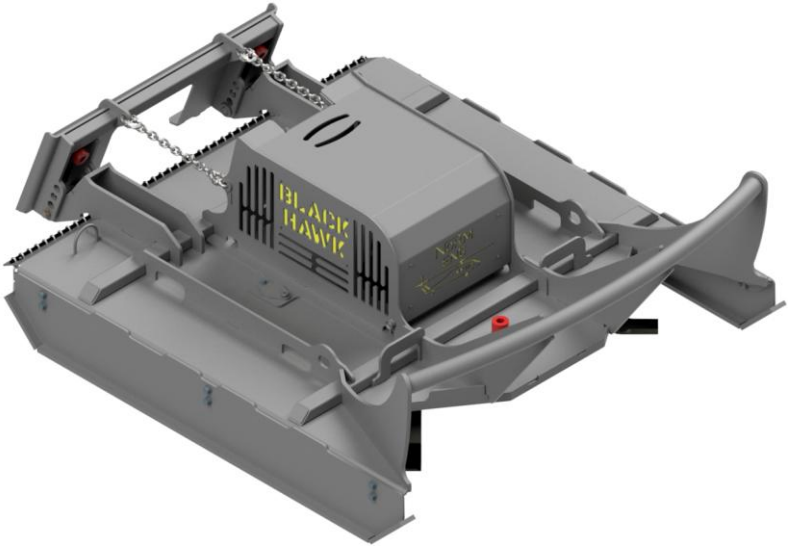

6ft Blackhawk Brush Cutter

Congratulations on purchasing a Norm Engineering Pty Ltd attachment. We have designed this 6ft Blackhawk brush cutter for a long, productive, and safe life. Your attachment will provide you with years of service provided regular maintenance and correct usage is applied.

This manual offers a guide on how to safely assemble, mount, operate and maintain your 6ft Blackhawk brush cutter. While the manual attempts to cover most situations, there are many unforeseen risks and events that are not included due to the capability of the 6ft Blackhawk brush cutter. On this basis the owner and/or operator must determine if this attachment is suited for a particular purpose.

Norm Engineering Pty Ltd can accept no responsibility or liability for how you operate your equipment: we can only provide warning notes and safety precautions in relation to the standard operation of the 6ft Blackhawk brush cutter.

The illustrations and data used in this manual were current at the time of printing but due to possible engineering and/or production changes, this product may vary slightly. Norm Engineering Pty Ltd reserves the right to redesign and/or change components as may be necessary without notification.

Copyrights © 2025 Norm Engineering

2 SAFETY DEFINITIONS: TERMS AND SYMBOLS

We will use the ANSI Z535.4-2011(R2017) standard for the definitions of signal words as described in conjunction with colours red, orange, and yellow. These are used with the Safety Alert Symbol:

- **Signal word:** Are defined as the words used in the signal word panel. The signal words for hazard alerting signs are “DANGER”, “WARNING”, and ‘CAUTION”. Safety notice signs use the signal word “NOTICE”. Safety instruction signs use signal words that are specific to the situation.

- **DANGER:** Indicates a hazardous situation, which, if not avoided, **will** result in death or severe injury. This signal word is to be limited to the most extreme situations. (White letters on a red background)

- **WARNING:** Indicates a hazardous situation, which, if not avoided, **could** result in death or severe injury. (Black letters on an orange background)

- **CAUTION:** Indicates a hazardous situation, which, if not avoided, **could** result in minor or moderate injury. (Black letters on a yellow background)

- **NOTICE:** Indicates information considered important, but **not** hazard-related (e.g., messages relating to property damage). (White letters on a blue background)

- **SAFETY INSTRUCTIONS**: Indicates a type of safety sign, where specific **safety-related instructions** or **procedures** are described. More definitive signal words are encouraged, where practical (e.g., SAFE SHUTDOWN PROCEDURE, SAFE OPERATING PROCEDURE). (White letters on a green background)

Copyrights © 2025 Norm Engineering

3 SAFETY INSTRUCTIONS

⚠ WARNING

Obey all the safety instructions listed in this section and throughout this manual. Failure to follow instructions could result in death or severe injury.

NOTICE

Before attempting any type of assembly operation, maintenance, or other work on or near this product:

- READ and COMPLETELY UNDERSTAND:
    - This manual,
    - The manuals provided with the power unit being used with this attachment.
- Read and understand all safety signs associated with the equipment being used.
- Know all your controls and know how to suddenly stop all power unit movement, the attachment movement, and the engine in case of an emergency.

SAFETY IS YOUR RESPONSIBILITY AS THE OPERATOR OF THE EQUIPMENT

Inappropriate and/or irresponsible use of a 6ft Blackhawk brush cutter may cause severe injury and trauma. The operator must have all relevant industry competencies, qualifications, certificates, and/or licenses.

The operator must understand their responsibilities under the relevant acts and regulations of the governing body. Failure to comply with your legal obligations under the act may result in prosecutions against you.

As the equipment operator you are responsible to familiarise yourself, and anyone else who will assemble, operate, maintain, or work around this product with the safety information contained within this manual. You must make certain that all operators and maintenance personnel have a complete understanding of the full and exact contents of this manual and those of the power unit.

Copyrights © 2025 Norm Engineering

There are usually specific precautions and steps in the power unit operating manual to be taken to ensure your safety prior to engaging the attachment.

Conduct a job site survey during the planning phase of any construction project to identify potential hazards and develop and implement appropriate control measures to protect workers.

Accidents are preventable if the equipment operator is careful and responsible. No accident prevention program can be successful unless there is a wholehearted commitment and cooperation of the person who is solely responsible for the operation of the equipment.

Make sure anyone who will be installing, maintaining, repairing, removing, and/or storing this product applies the Workplace Health and Safety Act requirements. This includes ensuring that the person has been instructed in the safe operation of this product and of the power unit to which this attachment is likely to be attached.

Know and follow good work practices, some of these include:

- To optimise the physical environment such as having a well-lit, level surface that is clean and dry to work on.
- Use properly grounded, test and tagged electrical outlets and tools.
- Use the right tool for the job at hand.
- Make sure that your tools are in good condition for performing the required function.
- When using tools, wear the protective equipment specified by the tool manufacturer (hardhat, safety glasses, work gloves, protective shoe…)
- When the attachment has been out in the sun, remember to wear protective gloves as the metal will be hot to touch.
- Before starting, know the job duration, job complexity, and best procedure.
- Ensure workers have the capacity to do the job.
- Check that all hazards have been identified and control measures implemented.
- Clear communication so everyone present knows what is happening.
- Clear emergency stop procedure so there is no confusion in an emergency.
- Ensure the use of tyre stoppers and securing framework to stop the plant and plant attachment moving during maintenance.

Copyrights © 2025 Norm Engineering

3.1 IMPORTANT POINTS

When your power unit is used during any type of assembly, operation, maintenance, or other work on or near this product:

- Before leaving the operator's station or before beginning any type of work on this product, lower this product to the ground, apply your power unit's parking brake, stop the engine, remove the starter key, wait for all moving parts to stop and then relieve all pressure in the hydraulic lines. Refer to your power unit's operating manual for instructions on preparing the equipment for hitching up an attachment and relieving hydraulic pressure in lines.
- Know your power unit's safe lifting and operating capacity and the weight of this product. (Check the parent machines operator manuals for safe operating limits).
- Only allow the operator to be around the power unit or this product when either is in motion. Ensure work area is clear of all personnel.
- Apply all safety guidelines in relation to the operator and the equipment.
- Only operate controls from the operator's station.
- Maintain operator presence at all times when the engine is running, or the product is raised on the power unit.
- Reduce speeds when additional weight and width need to be considered especially over rough ground.
- Consider the operating environment if dust is a concern reduce the machine speed.
- Whilst in motion keep the product close to the ground and under control.

Copyrights © 2025 Norm Engineering

4 PREDELIVERY

The following steps should be performed when fitting this attachment to a power unit for the first time. Failure to perform these checks may lead to damage of the attachment, the power unit and be a risk to safety. Warranty claims that arise as a result of skipping these steps may be challenged.

4.1 CHECK PICKUP FIT

Perform ‘5.1 Hitching Up the 6ft Blackhawk brush cutter’ to check how the attachment fits the coupler. Check for the following:

- Do the pins lock?
- Is it a snug fit?

4.2 CHECK RANGE OF MOTION

Carefully go through all safe range of motions for the parent machine. If unexpected contact occurs, contact Norm Engineering to discuss. Due to the capabilities of this product some contact with the machine may be unavoidable. In this case place the warning sticker provided on the attachment and inform the owner/operator.

Copyrights © 2025 Norm Engineering

4.3 CHECK HYDRAULIC HOSES

If you are unsure how to route the hydraulic hoses, contact Norm Engineering. Connect hoses and once again thoroughly check full range of motion to make sure:

- They do not pull tight.
- They do not have excessive length.

If the hose length is not correct, call Norm Engineering first for assistance.

4.4 HYDRAULIC MOTOR RUNNING-IN

To maximise the life of the unit, it must be run in for a period. To conduct the running in procedure, suspend the brush cutter just off the ground in a horizontal working position. Ensure there are no bystanders within the nominated radius as defined in the risk assessment completed prior to commencing any works.

Operate the motor at 30% of rated pressure for 20 minutes before application of full operating load.

Copyrights © 2025 Norm Engineering

5 ASSEMBLY INSTRUCTIONS

WARNING Obey all instructions listed in this section of the manual. Failure to follow the instructions listed below could lead to serious injuries.

For any assistance with the following processes, please contact Norm Engineering.

5.1 HITCHING UP THE 6FT BLACKHAWK BRUSH CUTTER

DANGER All safety precautions pertaining to both the power unit and the 6ft Blackhawk brush cutter need to be followed. Sufficient planning should be made prior to any work commencing in case of an emergency situation.

Step one: Before beginning any work on this product, lower the product to the ground on a firm level surface that is large enough to accommodate this product, the power unit and all workers involved in the hitching up the 6ft Blackhawk brush cutter.

Step two: Refer to your power unit's operating manual for instructions on hitching up this attachment. Visually inspect to ensure the attachment is fully engaged to the power unit hitch.

Step three: Engage the locking mechanism. A visual inspection should be performed to confirm all locking systems are secured. Give the 6ft Blackhawk brush cutter a few short sharp movements close to the ground to ensure it is engaged.

Step four: Rest the attachment on the ground and refer to the power unit operating manual to release the pressure in the hydraulic system.

Step five: Connect the hydraulic couplings on the 6ft Blackhawk brush cutter to the power unit couplings following all safety precautions specified in the power units operating manual.

Step six: Start the machine and cycle the 6ft Blackhawk brush cutter hydraulic motor several times before taking it near other personnel.

Copyrights © 2025 Norm Engineering

5.2 REMOVING THE 6FT BLACKHAWK BRUSH CUTTER

DANGER

All safety precautions pertaining to both the power unit and the 6ft Blackhawk brush cutter need to be followed. Sufficient planning should be made prior to any work commencing in case of an emergency situation.

Step one: Remove the machine from anywhere near other personnel and onto a firm level surface large enough to safely accommodate this product, the power unit and all workers involved in removing the 6ft Blackhawk brush cutter.

Step two: Rest the 6ft Blackhawk brush cutter on the ground.

Step three: Disconnect the attachments hydraulic couplings from the power unit following all safety precautions. Refer to your power unit's operating manuals.

Step four: Disengage the locking mechanism. A visual inspection should be performed to make sure the 6ft Blackhawk brush cutter is fully disengaged.

Step five: Refer to your power unit's operating manual for instructions on removing the attachment and confirm the hitch is fully disengaged from the 6ft Blackhawk brush cutter.

Step six: Store safely.

Copyrights © 2025 Norm Engineering

6 OPERATING INSTRUCTIONS

DANGER

When using the 6ft Blackhawk brush cutter, ensure all personnel wear appropriate personal protective equipment at all times. All personnel must stand well clear of the 6ft Blackhawk brush cutter during operation. Contact with the attachment, parent machine or flying debris and dust could cause injury to personnel working in the vicinity of the machine.

WARNING

- **USED** for cutting and slashing brush, brush like material and grass **ONLY** and not for any other purposes
- **REFER** to the parent equipment (power unit) manual to ensure you follow all the limits specified. Know not to exceed load limits.

CAUTION

- **ENSURE** the skids of the brush cutter are in contact with the ground at **ALL** times when the blades of the brush cutter are in motion.
- **ENSURE** that all safety chains and guards are intact and undamaged.
- **ENSURE** that the brush cutter is only ever used for its intended purpose, it is not designed to carry any load whatsoever.

6.1 STARTING THE BRUSH CUTTER

NOTICE

ALWAYS engage the brush cutter with the engine at idle and then gradually increase the revs until you reach operating speed. Starting the brush cutter with the high engine revs may cause damage to the brush cutter's drive train and will lead to premature failure.

6.2 SPECIFIED OPERATIONS AND LIMITATIONS

DANGER

The 6ft Blackhawk brush cutter is NOT to be used:

- to carry people.
- as a lifting point.
- to pull or push over objects other than vegetation material.
- to trim high-level hedges or bushes.

Misuse may damage the attachment or lead to injury and trauma.

Copyrights © 2025 Norm Engineering

6.3 AUXILARY HYDRAULIC REQUIREMENTS

DANGER

Exceeding the hydraulic flow rates and pressures provided below **WILL** cause damage to your brush cutter and **MAY** cause injury and/or death. This damage is not covered by the warranty provided with your brush cutter.

NOTICE

If your machine is not capable of producing the flow rates and pressures provided below the brush cutter will not cut the brush/grass cleanly.

Motor			
Gearbox/Bearing Adaptor			
Minimum Pressure [PSI]		**Maximum Pressure [PSI]**	
Minimum Flow [LPM]		**Maximum Flow [LPM]**	

6.3.1 CONNECTING THE CASE DRAIN

If your machine has a case drain breakaway line installed, it is recommended you connect the case drain coupling – even if the auxiliary flow is less than those stated in the table below.

If your machine **DOESN'T** have a case drain breakaway port, the brush cutter can be used as long as the flow remains below the figures listed in the table below.

Motor Model	Auxiliary flow [LPM] (If flow exceeds this value, case drain is mandatory)
125cc [HM001]	95

Copyrights © 2025 Norm Engineering

6.4 UTILISING THE GAUGES

6.4.1 PRESSURE GAUGE ONLY

The pressure gauge installed on the 6ft Blackhawk brush cutter serves as a diagnostic instrument to facilitate optimal operation of the attachment. It provides real-time measurement of the instantaneous hydraulic or hydraulic-driven load exerted on the motor and cutting mechanism.

Most primary hydraulic units are designed with a relief pressure set near 3,000 PSI. The precise pressure can be observed during initial activation of the hydraulics, at which point the system pressure will transiently peak before stabilizing at approximately 1,000 PSI during operational speed under no load conditions. During cutting operations, it is recommended to maintain the brush cutter operating pressure below 2,500 PSI to ensure optimal performance and system safety.

6.4.2 TACHOMETER AND PRESSURE GAUGE

As previously outlined, it is advised to record the maximum rotational speed (RPM) under no-load conditions. During operation of the 6ft Blackhawk brush cutter, monitor the hydraulic pressure at which the RPM begins to decline. Operate the equipment at a hydraulic pressure approximately 200–300 psi below this threshold. This pressure range constitutes the optimal maximum load for heavy-duty cutting performance.

Copyrights © 2025 Norm Engineering

6.5 REASONABLY FORSEEABLE MISUSE

DANGER

Misuse of the brush cutter significantly increases the risks involved in the operation. It is the responsibility of the operator to ensure the activity they are undertaking is safe, not only for themselves but for other persons in the area.

Misuse of the brush cutter will invalidate the warranty offered by Norm Engineering. Cost of repairs will be the sole responsibility of the equipment owner.

Reasonably foreseeable misuses include but are not limited to:

- **OPERATING** the brush cutter off the ground.
- **OPERATING** the brush cutter at an angle to the ground. For example, never roll the brush cutter back or forward during operation. The brush cutter skids should always remain in contact with the ground as debris and project front the rear of the attachment.
- **USING** the brush cutter to cut vegetation other than brush/grass. This **WILL** cause damage to the brush cutter and **COULD** cause an injury or fatality.

DANGER

- **OPERATING** the brush cutter **WITHOUT** performing section '7.2 Prior to Use'.

Copyrights © 2025 Norm Engineering

6.6 CUTTING TECHNIQUE

During operation, the brush cutter skids should be kept parallel and in close proximity to the ground at all times. To extend the life of the brush cutter body, the brush cutter should be operated with minimal pressure between the skids and the ground. This operating technique will reduce the wear in skids and should provide a better finish.

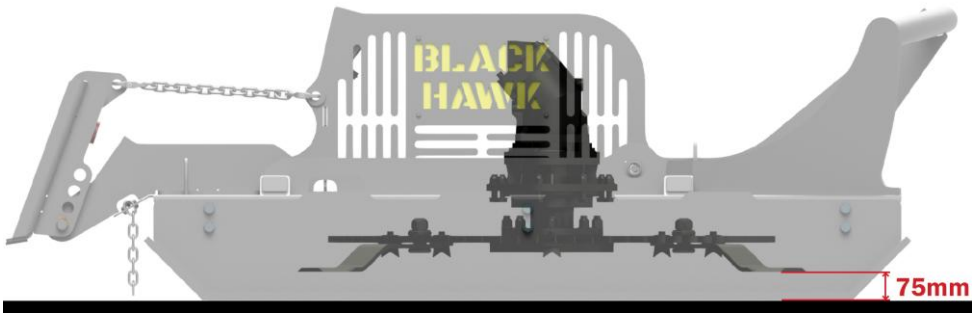

As the brush cutter is hydraulically powered implement, the performance of the brush cutter depends on the available hydraulic power of the parent machine. If the cutting conditions are extremely tough and the brush cutter is struggling to cut the brush/grass cleanly, it is recommended to take a narrower cut. This will require less power and create space for the cut brush/grass to clear itself out the rear of the brush cutter.

Copyrights © 2025 Norm Engineering

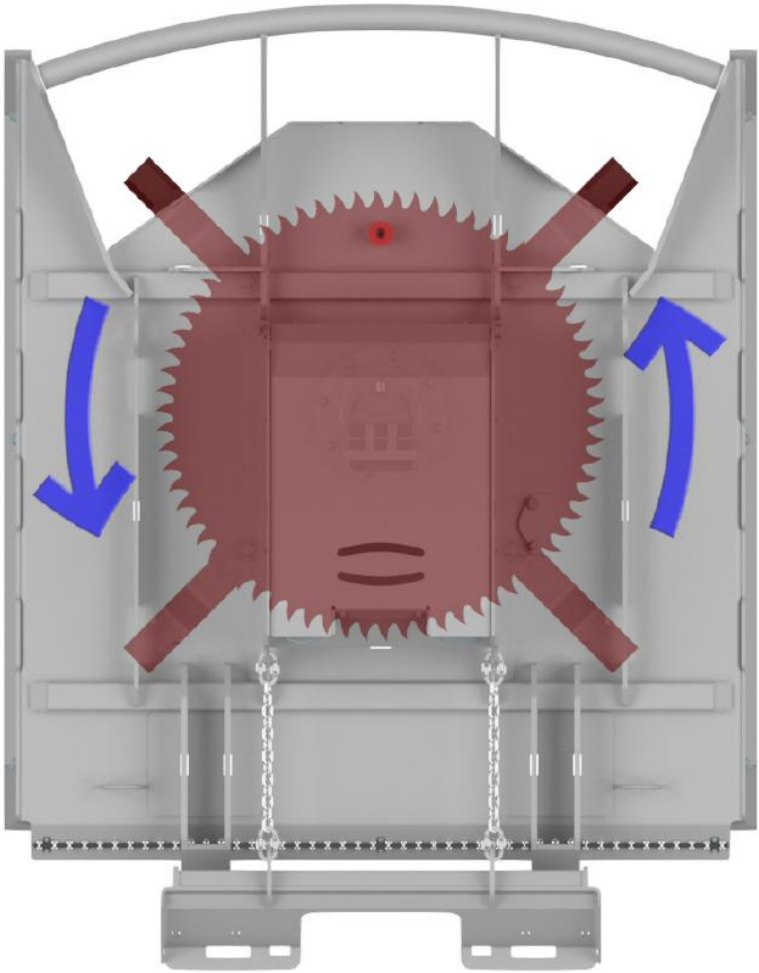

The brush cutter rotates anticlockwise (looking from above), and so material will discharge out the left-hand rear corner of the brush cutter. To maximise performance, when taking a partial cut, ensure the uncut grass/brush is on the right-hand side of the brush cutter.

Copyrights © 2025 Norm Engineering

6.7 HEIGHT ADJUSTMENT

The 6ft Blackhawk brush cutter comes with a height adjustable pickup. This allows for different machine hitch heights so as not to impede opening of machine cab doors. By simply removing a bolt and loose retainer the pickup can be raised or lowered to the next height position (four in total). These locking holes are highlighted in red in the image below.

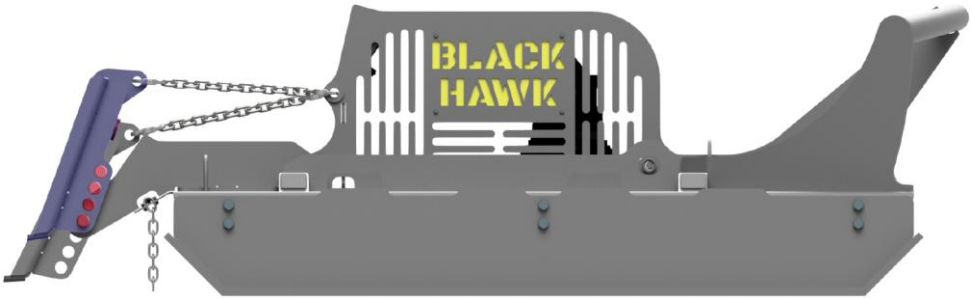

In addition to the height adjustment, the 6ft Blackhawk brush cutter comes with reversable side skids which can be both swapped from lefthand to righthand side and vice versa. The side skids are also able to be flipped around on each side to reverse the outside to inside position. Both of these are achieved by removing the six bolts mounting the plate.

Copyrights © 2025 Norm Engineering

7 MAINTENANCE AND CARE

WARNING

BEFORE commencing maintenance, place the attachment on level ground. Ensure enough area to perform maintenance on the attachment. Follow ‘5.2 Removing the 6ft Blackhawk brush cutter’.

WARNING

AFTER maintenance is complete, follow ‘5.1 Hitching Up the 6ft Blackhawk brush cutter’.

7.1 HYDRAULICS

WARNING

Read and understand all safety requirements prior to beginning any maintenance to any hydraulic connections. It is imperative that if there are any fittings, repairs etc. required these must be conducted by a fully certified and qualified hydraulics fitter.

7.2 PRIOR TO USE

Prior to use, the 6ft Blackhawk brush cutter shall be visually inspected to verify the attachment is in an operational state. The inspection will check for:

- Signs of wear, including corrosive and abrasive wear.
- Markings are legible.
- Welds are not damaged, cracked or worn,
- Hydraulic hoses, fittings, bearing adaptor, and motor are in good condition with no leaks.
- All fasteners are in place and correctly torqued.

DANGER

Pay particular attention to the bolts that secure the blades. These must be correctly torqued and undamaged to ensure safe operation of the brush cutter.

- Inspect the wear on the skids.
- Grease all fittings – this needs to be performed on a daily basis.

Copyrights © 2025 Norm Engineering

⚠ DANGER

If the brush cutter **DOES NOT** pass any of the above checks **DO NOT** operate the brush cutter until they are remedied.

7.3 ROUTINE INSPECTION (EVERY 12 WEEKS)

Routine inspections should include but is not limited to the following:

- Fittings, hoses, and hydraulics must be checked to ensure there are no leaks.
- Pins and bushes should be inspected for signs of excessive wear and replaced before the wear damages the structure of the 6ft Blackhawk brush cutter.
- Inspect the attachment for wear, particularly around the skids, blades, and seek advice on repairs if wear is excessive.
- Check to ensure attachment markings are legible.
- Organise for a certified and qualified hydraulics fitter to inspect and replace hydraulic hoses and seals in the hydraulic parts, as necessary. For additional information refer to section '12 Warranty'.

7.4 BEARING ADAPTER MAINTENANCE

The bearing adaptor oil should be changed after the first 50 hours of use and every 500 hours thereafter. If the brush cutter is not used on a regular basis, the oil should be changed at least once every 12 months.

The oil used in the bearing adaptor should be SAE 80W-140 gear oil with oil capacity being 650ml.

A suction gun will be required to remove the old oil from the bearing adaptor whenever an oil change is performed.

The gear drive should be partially disassembled to inspect gears and bearings at 1000-hour intervals.

Copyrights © 2025 Norm Engineering

7.5 CUTTING SYSTEM MANTENANCE

DANGER

- **DO NOT** use blocking material that could collapse or shift positions.
- **DO NOT** use wood or steel blocking that shows any signs of material decay.
- **DO NOT** use blocking that is warped, twisted, or tapered.
- **ENSURE** a safe working environment prior to replacing any brush cutter component.
- **USE** new fasteners whenever reassembling.
- **REMOVING** and installing the disc my cause an imbalance. Dangers such as crushing or misalignment may occur. Maintenance should be performed by a professional.

7.5.1 BLADE REMOVAL

Maintenance procedures for the blades and inspection of the fasteners can be performed without disassembling the disc or blade beams.

Step one: Refer to section “5.2 Removing the 6ft Blackhawk Brush Cutter” to position the equipment on adequate blocking, ensuring access to the blades for removal.

Step two: Loosen the locking bolt securing the inspection port cover, then rotate the inspection port plate laterally, as illustrated on the following page.

Step three: Manually rotate the blade disc assembly until the blade fastener aligns beneath the inspection port.

Step four: Use an extended socket wrench to loosen the fastener nut, then tap gently on the top of the bolt to dislodge and free it from the assembly.

Step five: Detach the blade from the disc and deposit the fastener bolt onto the ground.

Step six: Repeat steps 3 through 5 as necessary to remove additional blades.

Step seven: To detach the mulching teeth, loosen the ten ½-inch hexagonal head bolts securing the cutting disc.

Copyrights © 2025 Norm Engineering

7.5.2 BLADE INSTALLATION

Step one: Refer to procedure “5.2 Removing the 6 ft Blackhawk Brush Cutter” to position the brush cutter on appropriately rated support blocks, ensuring adequate load-bearing capacity to sustain the attachment and facilitate access for blade installation.

Step two: Verify that all new fasteners are free from contaminants by ensuring they are clean, dry, and devoid of lubrication.

Step three: Insert the hardened bushing into the designated blade mounting point, then position the blade securely between the two support beams.

Step four: Secure the blade by inserting the nib bolt from beneath and tightening the tapered nut sufficiently to prevent displacement of the bolt.

Step five: Rotate the blade assembly clockwise; repeat procedures in Steps 3 and 4 for each remaining blade until all blades are installed.

Step six: Utilize an extended socket wrench through the inspection port to tighten the tapered 1 1/8”- inch nuts to the specified torque of 1000 Nm.

Step seven: While rotating the blade assembly clockwise, uniformly torque all tapered nuts until all fasteners are properly secured according to specified torque values.

Step eight: Install the mulching teeth by positioning ten 1/2-inch hex bolts along with the corresponding teeth onto the cutting disc. Apply torque to each 1/2-inch nut to 128 Nm, adhering to specified tightening procedures.

Step nine: Reinstall the inspection port cover and secure it by tightening the locking bolt.

Step ten: Refer to procedure “5.1 Hitching Up the 6 ft Blackhawk Brush Cutter,” exercising caution during initial motor operation to monitor for early indications of abnormal vibrations.

Copyrights © 2025 Norm Engineering

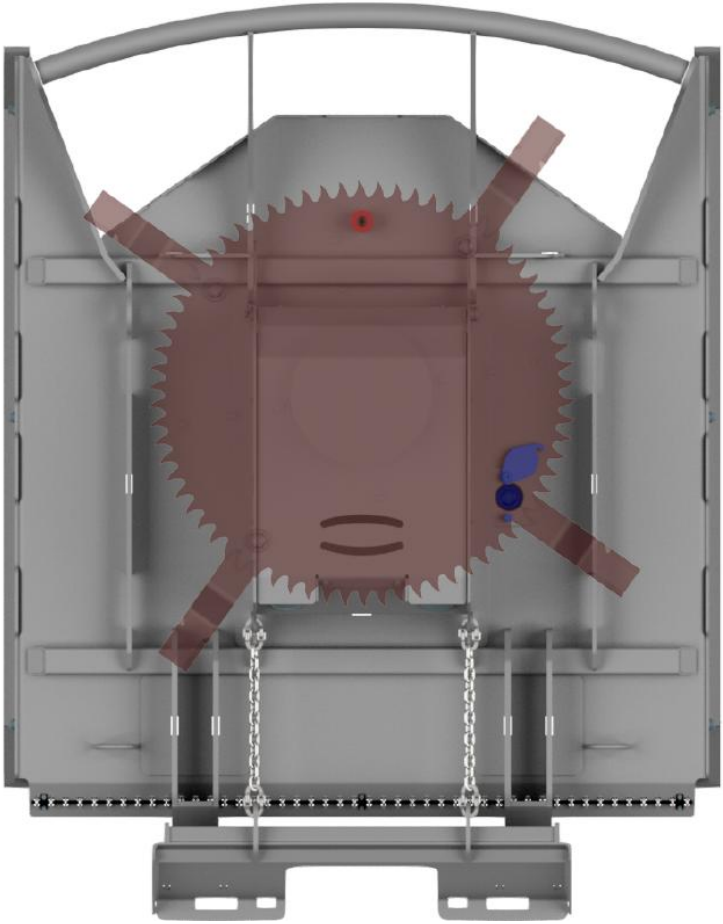

Copyrights © 2025 Norm Engineering

7.5.3 DISC DISASSEMBLY

Step one: Refer to section 5.2 "Removing the 6ft Blackhawk brush cutter" to position the equipment on stable, level ground, ensuring adequate blocking to support the attachment and grant access to the blade assembly beneath.

Step two: Remove the gearbox cover pin and gearbox cover.

Step three: Immobilize the disc to prevent detachment and secure the blades against rotational movement. **NOTE:** this is an operation that needs careful planning as the disc is extremely heavy.

Step four: Remove the eight central bolts to facilitate lowering the disc assembly and repositioning it to a designated clear work area.

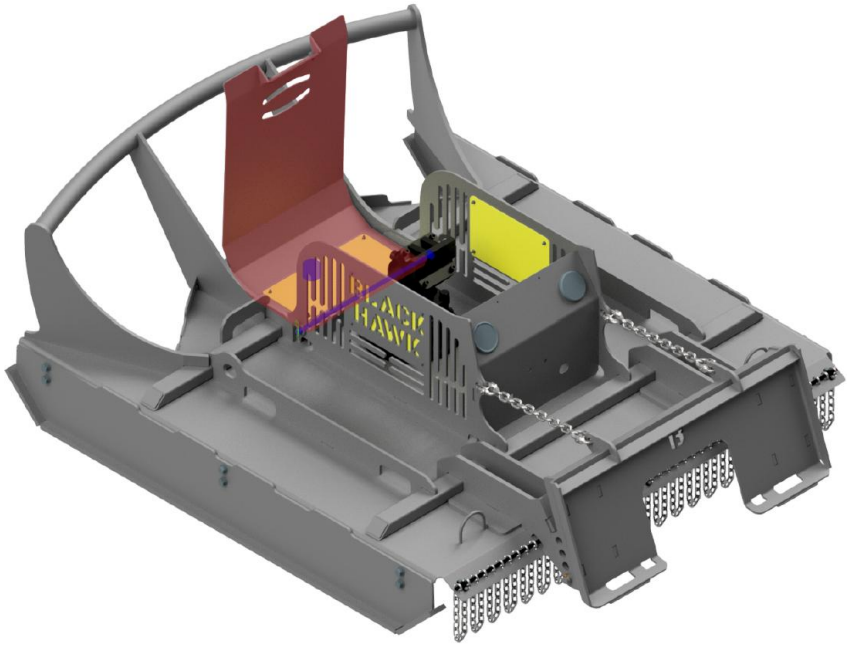

Copyrights © 2025 Norm Engineering

7.5.4 DISC ASSEMBLY & INSTALLATION

Step one: Establish a clean, stable, and secure workspace suitable for assembling the disc. Inspect all fasteners; ensure they are new, thoroughly cleaned, completely dry, and free of lubricant residues.

Step two: Install the mulching teeth by positioning ten 1/2-inch hex bolts along with the corresponding teeth onto the cutting disc. Apply torque to each 1/2-inch nut to 128 Nm, adhering to specified tightening procedures.

Step three: Secure the eight central bolts into their designated positions, as depicted on the previous page.

Step four: Align and stack the hub assembly and disc onto the protruding bolts of the disc.

Step five: Tighten the eight central bolts, utilizing washers and Nyloc nuts, then secure the tapered nuts onto the nib bolts to complete the assembly.

Step six: Verify the alignment between the bearing adaptor and the disc. Once confirmed, tighten the 3/4-inch nuts to 620 Nm and lock them into position. Repeat the tightening sequence in a crosswise pattern to ensure uniform torque application and confirm no further tightening is necessary.

Step seven: Re-install the gearbox cover and insert the gearbox cover pin.

Step eight: Remove all securing devices from the disc. Proceed with the procedure outlined in section 5.1, “Hitching Up the 6ft Blackhawk Brush Cutter.” During initial motor operation, conduct meticulous inspections, watching closely for early indications of excessive vibration.

Copyrights © 2025 Norm Engineering

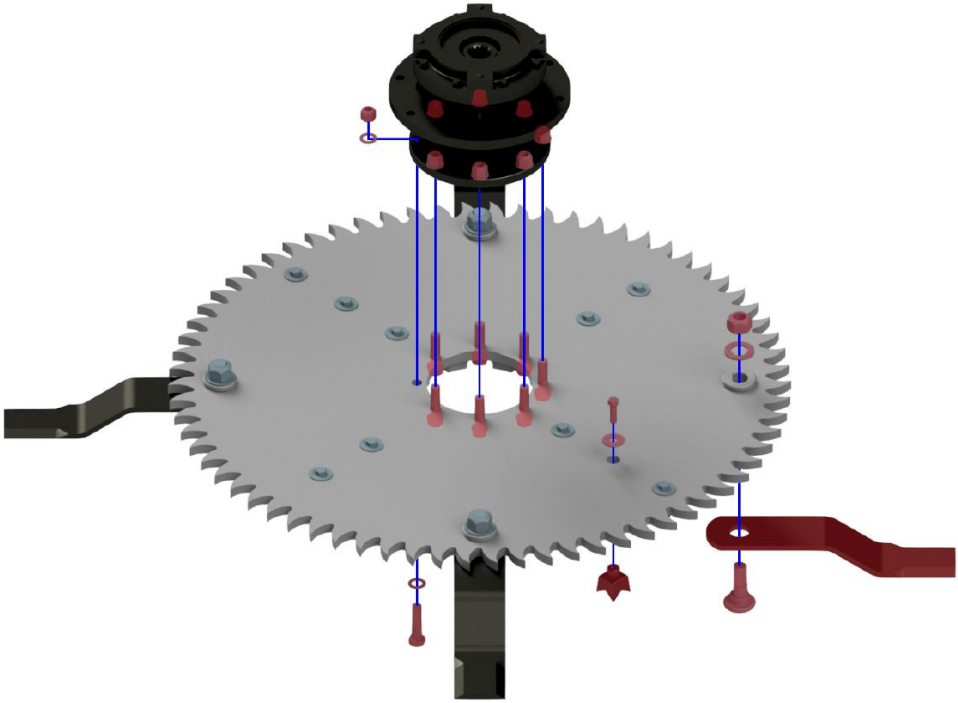

Copyrights © 2025 Norm Engineering

8 RISK ASSESSMENT

Assessment Team: Norman Pesch, John Pesch, Sam Ramsden, Chris Tsompanidis

Date of Assessment: 17/06/2025 **Manufacturer:** Norm Engineering Pty Ltd

Location: Brisbane **Contact Person:** Norman Pesch

Attachment: 6ft Blackhawk brush cutter **Weight:** 1025kg

Intended use: Cutting Brush / Clearing Vegetation **Construction material:** Steel

Air Operated: NO **Hydraulic Operated:** YES **Manually operated:** NO

NOTE: When assessing Risk, you MUST consider the following

Inherent Risk:
(Risk before ANY controls). I.e., Before guarding / safety features are fitted.

Residual Risk:
(Risk after controls are fitted). I.e., after guarding / safety features are fitted.

Non-Standard Operating Risk:
(Cleaning, Maintenance). I.e., What other risks can these tasks create.

Predictable Misuse:
I.e., What risks could occur due to misuse of the machine.

HAZARD INFORMATION

The plant must be assessed against the hazards listed for the probability of harm to operators working in close proximity and the environment.

Probability	Consequence	
A – Common or repeating occurrence	1 – Catastrophic	– Fatalities
B – Known to occur or “It has happened”.	2 – Major	– Major injury, LTI
C – Could occur, “I’ve heard of it happening”.	3 – Moderate	– Minor Injury
D – Not likely to occur	4 – Minor	– First aid, slight injury
E – Practically impossible	5 – Insignificant	– Minimal risk of injury

	A	B	C	D	E
1	H	H	H	S	S
2	H	H	S	S	M
3	H	H	S	M	L
4	H	S	M	L	L
5	S	S	M	L	L

H = High

S = Significant

M = Medium

L = Low

Copyrights © 2025 Norm Engineering

Entanglement:

Can anyone's hair, clothing gloves, necktie, jewellery, rags, and other materials become entangled with moving parts of plant, or materials in motion? **People in close proximity to the plant and plant attachment during operation have the ability to become entangled. i.e., HYD. motors, bearing adaptor, and rotating plates.**	Yes ☒	No ☐	A ☐ B ☐ C ☐ D ☒ E ☐	1 ☐ 2 ☒ 3 ☐ 4 ☐ 5 ☐	High ☐ Significant ☒ Medium ☐ Low ☐

Crushing:

Can anyone be crushed due to falling, uncontrolled or unexpected movement of plant attachment or its load, lack of capacity to slow, stop or immobilise the plant, tipping or rolling over, parts of plant attachment collapsing, contact with moving parts during testing, inspection, maintenance, cleaning, or repair, thrown off, under or trapped between plant and materials or fixed structures? **People in close proximity to the plant and plant attachment during operation could be crushed if the operator is not being sufficiently observant, or control over the plant is lost.**	Yes ☒	No ☐	A ☐ B ☐ C ☐ D ☒ E ☐	1 ☐ 2 ☒ 3 ☐ 4 ☐ 5 ☐	High ☐ Significant ☒ Medium ☐ Low ☐

Cutting, Stabbing, Puncturing:

Can anyone be cut, stabbed, or punctured by coming in contact with moving plant or parts, sharp or flying objects, work pieces ejected, work pieces disintegrated, or other factors not mentioned? **People can be cut, stabbed, or punctured by coming into contact with projectiles flung from the rotating broom.**	Yes ☒	No ☐	A ☐ B ☐ C ☒ D ☐ E ☐	1 ☐ 2 ☒ 3 ☐ 4 ☐ 5 ☐	High ☐ Significant ☒ Medium ☐ Low ☐

Striking:

Can anyone be struck by moving objects due to plant or work pieces being ejected or disintegrated, mobility, uncontrolled or unexpected movement of the plant or other factors? **People in close proximity to the plant and plant attachment during operation could be seriously hurt if they came into contact with the plant, or plant attachment if the operator is not being sufficiently observant, or control over the plant is lost.**	Yes ☒	No ☐	A ☐ B ☒ C ☐ D ☐ E ☐	1 ☐ 2 ☒ 3 ☐ 4 ☐ 5 ☐	High ☒ Significant ☐ Medium ☐ Low ☐

Copyrights © 2025 Norm Engineering

Slipping, Tripping, Falling:

Can anyone using the plant or in the vicinity of the plant, slip, trip or fall due to the working environment or other factors? poor housekeeping, dust on the floor around machines, slippery or uneven work surfaces or lack of guardrails. **People standing on the plant attachment could slip or fall from it.**	Yes ☒	No ☐	A ☐ B ☐ C ☐ D ☒ E ☐	1 ☐ 2 ☐ 3 ☒ 4 ☐ 5 ☐	High ☐ Significant ☐ Medium ☒ Low ☐

Shearing:

Can anyone's body parts be cut off between two parts of the plant, or between a part of the plant and a work piece or structure? For example, on a metal guillotine can a finger fit under the guard. **People not following SOP's or plant guidelines could become injured from misuse or working in the vicinity of the plant and plant attachment.**	Yes ☒	No ☐	A ☐ B ☐ C ☐ D ☒ E ☐	1 ☒ 2 ☐ 3 ☐ 4 ☐ 5 ☐	High ☐ Significant ☒ Medium ☐ Low ☐

Friction:

Can anyone be burnt due to contact with moving parts or surfaces of the plant, or material handled by the plant? For example, on the grinder is there more than 1 mm gap between the tool rest and the wheel? **People could be burned by rotating parts if correct SOP's are not followed.**	Yes ☒	No ☐	A ☐ B ☐ C ☐ D ☒ E ☐	1 ☐ 2 ☐ 3 ☒ 4 ☐ 5 ☐	High ☐ Significant ☐ Medium ☒ Low ☐

High Pressure Fluid:

Can anyone come into contact with fluids under high pressure, due to plant failure or misuse of the plant? **The plant attachment utilizes the plants high pressure hydraulic system, if a failure occurs it is possible to come into contract with high pressure fluid.**	Yes ☒	No ☐	A ☐ B ☐ C ☐ D ☒ E ☐	1 ☐ 2 ☒ 3 ☐ 4 ☐ 5 ☐	High ☐ Significant ☒ Medium ☐ Low ☐

Electrical:

Can anyone be injured by electrical shock or burnt due to damaged or poorly maintained leads or switches, water near electrical equipment, working near or contact with live electrical conductors, lack of isolation procedures or the factors not mentioned? For example, are any switches broken, is there a red emergency stop? Can each machine be locked off for repairs?	Yes ☐	No ☒	A ☐ B ☐ C ☐ D ☐ E ☐	1 ☐ 2 ☐ 3 ☐ 4 ☐ 5 ☐	High ☐ Significant ☐ Medium ☐ Low ☐

Copyrights © 2025 Norm Engineering

Dust:

Can anyone suffer ill health or injury due to exposure to dust? For example, cutting, living silica. Lack of vision – External influences causing the dust. Plant operation causing the dust. **Depending on the operation location of the plant and plant attachment dust could be a nuisance.**	Yes ☒	No ☐	A ☐ B ☐ C ☒ D ☐ E ☐	1 ☐ 2 ☒ 3 ☐ 4 ☐ 5 ☐	High ☐ Significant ☒ Medium ☐ Low ☐				

Noise:

Can anyone suffer hearing discomforts while the plant is in use? For example, the plant is noisy, and it is difficult to hear. **Depending on the brush/grass the plant attachment is operated on the friction could lead to excessive noise which could lead to confusion or even hearing damage.**	Yes ☒	No ☐	A ☐ B ☐ C ☒ D ☐ E ☐	1 ☐ 2 ☐ 3 ☒ 4 ☐ 5 ☐	High ☐ Significant ☒ Medium ☐ Low ☐				

Vibration:

Can anyone suffer injury due to the vibration of the plant? **The plant attachment could cause excessive vibration if it is operated whilst damaged or not correctly maintained.**	Yes ☒	No ☐	A ☐ B ☐ C ☒ D ☐ E ☐	1 ☐ 2 ☐ 3 ☒ 4 ☐ 5 ☐	High ☐ Significant ☒ Medium ☐ Low ☐				

Environmental:

Can the plant operation cause an environmental issue? For example – pollution, waste materials, noise.	Yes ☐	No ☒	A ☐ B ☐ C ☐ D ☐ E ☐	1 ☐ 2 ☐ 3 ☐ 4 ☐ 5 ☐	High ☐ Significant ☐ Medium ☐ Low ☐				

Risk Evaluation

Overall risk category of plant:	High	Significant	Medium	Low

Risk Controls

Most Desirable

- Elimination
- Substitution
- Engineering Controls
- Isolation
- Administrative Controls
- PPE

Least Desirable

- The best way to eliminate the risk is to remove the hazard.
- Substitute the hazardous plant with a safer part, alternative process.
- Design modification, installation of guarding, automation/ventilation.
- Isolate the plant, barricades, crossing, bunting, etc.
- Permits, clearances, lock out systems, certification.
- Short term control measure.

Copyrights © 2025 Norm Engineering

Hazard	Controls
Entanglement	Engineering Controls – A guard plate has been added to cover any rotating components to prevent accidents from happening. Isolation – Ensure the operating and maintenance manual provided with the plant attachment recommends the operator of the plant always follows SOP. The operator must make everybody working in the vicinity of the attachment aware of the dangers and before moving the plant ensure people are safe distance away. Ensure all personnel remain at a minimum of 100m from the vicinity of the brush cutter during operation. PPE – Ensuring all people who will be in the vicinity of the plant attachment during operation be wearing clothes with no loose ends that can become entangled in the plant attachment.
Crushing, Striking	Isolation – Ensure the operating and maintenance manual provided with the plant attachment recommends the operator of the plant always follows SOP. The operator must make everybody working in the vicinity of the attachment aware of the dangers and before moving the plant ensure people are safe distance away. Ensure all personnel remain at a minimum of 100m from the vicinity of the brush cutter during operation. PPE – The use of the correct PPE for the worksite will minimize the damage caused by an incident. A hard hat, steel cap boots and tough worksite clothes as an example. PPE – The use of high visibility PPE will help reduce the case of incidents occurring from impaired vision or operator distraction.
Cutting, Stabbing, Puncturing	Engineering Controls – Chains have been added to stop projectiles from being able to escape from under the plant attachment at speed. Isolation – Ensure the operating and maintenance manual provided with the plant attachment recommends the operator of the plant always follows SOP. The operator must make everybody working in the vicinity of the attachment aware of the dangers and before moving the plant ensure people are safe distance away. Ensure all personnel remain at a minimum of 100m from the vicinity of the brush cutter during operation. PPE – The use of the correct PPE for the worksite will minimize the risk of cutting when working in and around the plant attachment. Safety glasses, and tough worksite clothes will reduce the risk associated with debris being out from under the plant attachment.
Slipping, Tripping, Falling	Isolation – The plant attachment has NOT been designed to stand on unless entering or exiting the plant. This will be stated in the operating and maintenance manual. It is the responsibility of the operator to ensure that no persons stand on the plant attachment. PPE – Wearing the correct work boots will reduce chances of slipping.

Copyrights © 2025 Norm Engineering

Shearing	Engineering Controls – A guard plate has been added to cover any rotating components to prevent accidents from happening. Isolation – Ensure the operating and maintenance manual provided with the plant attachment recommends the operator of the plant always follows SOP. The operator must make everybody working in the vicinity of the attachment aware of the dangers and before moving the plant ensure people are safe distance away. Ensure all personnel remain at a minimum of 100m from the vicinity of the brush cutter during operation. Administrative Controls – A warning sticker should be placed in a visible position on the plant attachment highlighting the potential risk.
Friction	Engineering Controls – A guard plate has been added to cover any rotating components to prevent accidents from happening. PPE – Wearing protective gloves will reduce any damage from touching heated components.
High Pressure Fluid	Engineering Controls – The routing of the hydraulic hoses and the design of the plates which guard the hydraulic motor minimize the risk of the hydraulic failure and exposure to high pressure fluids. Administrative Controls – The manual will address correct maintenance schedules for the plant attachment hydraulics to reduce the risk associated with hydraulic component failure. Only authorized hydraulics fitters should perform repairs on hydraulic systems. Administrative Controls – A warning sticker should be placed in a visible position on the plant attachment highlighting the potential risk.
Dust	Isolation and Administrative Controls – To reduce the hazards associated with dust, the manual should instruct the operator to consider their working environment and operate in a manner to reduce the risk of dust suspensions in the air. This can be managed by operating at a sensible speed. PPE – If the environment is such that the dust cannot be sufficiently controlled, the onsite supervisor should ensure all workers are wearing the correct PPE.
Noise	PPE – To reduce the risk associated with excessive noise the correct PPE should be worn whilst operating or being within a vicinity of the plant and plant attachment during operations.
Vibration	Administrative Controls – A regular maintenance schedule will help prevent from issues such as misalignment or uneven wear which causes excessive vibration.

Copyrights © 2025 Norm Engineering

Any Modification to Plant Attachment Voids Risk Assessment

Purchaser and User are required to conduct their own risk assessment to identify hazards prior to use.

This risk assessment does not necessarily cover all possible hazards associated with this product and should be utilized in conjunction with the purchasers and users individual risk assessments to identify all environmental, health, and safety risks associated with specific tasks, locations, and personnel.

Copyrights © 2025 Norm Engineering

9 PARTS

QUALITY BACKUP

We manufacture 90% of our parts inhouse.
This means we can get your parts to you… quickly.

9.1 ORDERING PARTS

For ordering parts contact either your dealer or Norm Engineering directly. Contact details are included at the front of this manual. To assist, note the details of your 6ft Blackhawk brush cutter in the spaces provided under *Section 9.1.1 Reference Information*.

9.1.1 REFERENCE INFORMATION

Always refer to the model and serial number when ordering parts or requesting from you dealer. The serial number for this product is located on the identification place of your 6ft Blackhawk brush cutter.

Model Number:
……

Make:
……

Serial Number:
……

Date Purchased:
……

Copyrights © 2025 Norm Engineering

10 PARTS LIST

When ordering replacement parts, please include the following information:

- The machine make and model.
- The serial number on the attachment
- The item number, as indicated by the following figures and tables.
- Parts with a part number of "∴" indicate a component that varies dependent on machine make and model. A serial number and item number is essential if ordering these parts.

Items numbers with a "R" before the number indicate parts that require specialty tools and some knowledge in fabrication and welding to replace.

Copyrights © 2025 Norm Engineering

Item	Part Number	QTY	Description	Diagram
1	NBH6036	1	BLACK HAWK CUTTING SYSTEM	1
2	NBH6000	1	BLACK HAWK MAIN DECK	1
3	NBH6040	1	BLACK HAWK UNIVERSAL PICKUP	1
4	NBH6050	1	BLACK HAWK GEARBOX COVER	1
5	NBH6030	2	BLACK HAWK SKIDS	1
6	NBH6066	1	BLACK HAWK COVER PIN	1
7	PI561	2	HEIGHT ADJUSTMENT PIN	1
8	NBH6022	2	BLACK HAWK HIGHLIGHT PLATE	1
9	NBH6023	1	NORM ENG HIGHLIGHT PLATE	1
10	NBH6038	3	CHAIN HOLDER BRACKET	1
11	NSL5046	1	INSPECTION PORT COVER	1
12	NBH6039	1	ROUND BAR 12MM - 1830MM LENGTH	1
13	BU040	2	84mm NYLON BUSH INSERT	1
14	BU148	2	76mm NYLON BUSH INSERT CUT TO 56mm	1
15	NSL5059	4	PORT COVER/STOPPER BUSH	1
16	NSL5061	3	PLASTIC STOPPER	1
17	SPG-100-00400-01-P-B08	1	400 BAR GAUGE VALVE	1
18	SPG-100-F-W	1	PRESSURE GAUGE MOUNTING PLATE	1
19	KY07209	1	GEARBOX RPM GAUGE	1
20	KY07209-2	1	RPM GAUGE LOCKING SLIP	1
21	NBH6042	2	13 LINK UNIVERSALE PLATE CONNECTOR	1
22	NBH6041	23	REAR CHAIN ASSEMBLY - 16 LINKS	1
23	B74-2	2	LOCKING PIN STOPPER	1
24	R-CLIP	1	R - LOCKING PIN	1
25	N-M06C-NY	18	NYLOCK NUT [M6x1]	1
26	-	2	HEX BOLT || 3/8"x1"	1
27	-	3	HEX BOLT || M5x14	1
28	-	6	HEX BOLT || M6x20	1
29	-	12	HEX BOLT || M6x25	1
30	-	1	HEX BOLT || M12x30	1
31	-	12	HEX BOLT || M16x45	1
32	-	1	COUNTERSUNK BOLT || M12x40	1
33	-	3	COUNTERSUNK BOLT || M12x45	1
34	-	2	PLAIN WASHER || 3/8"	1
35	-	3	PLAIN WASHER || M5	1
36	-	36	PLAIN WASHER || M6	1
37	-	1	PLAIN WASHER || M12	1
38	-	12	PLAIN WASHER || M16	1
39	-	2	SPRING LOCK WASHER || 3/8"	1
40	-	3	SPRING LOCK WASHER || M5	1

Copyrights © 2025 Norm Engineering

41	-	1	SPRING LOCK WASHER || M12	1
42	-	12	SPRING LOCK WASHER || M16	1

Copyrights © 2025 Norm Engineering

Diagram 1

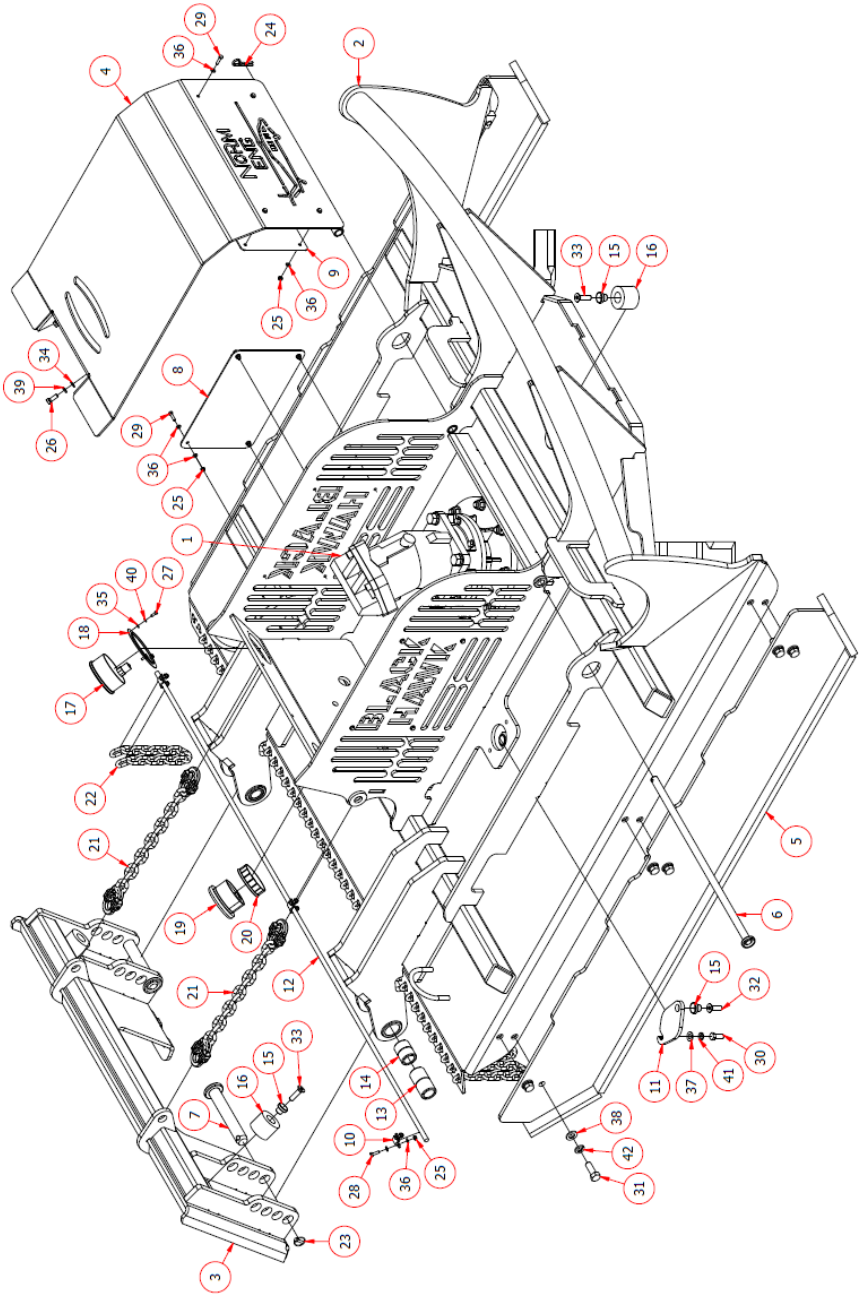

Copyrights © 2025 Norm Engineering

6ft BLAKCHAWK BRUSH CUTTER DISC PARTS LIST

Item	Part Number	QTY	Description	Diagram
1	NBH6035	1	BLACKHAWK DISC ASSEMBLY	2
2	BA001	1	BEARING ADAPTOR	2
3	HM001	1	HYDRAULIC MOTOR	2
4	BS-09264	4	ASP DOUBLE EDGED SLASHER BLADE	2
5	BSA-09368-1	4	BOLT T/S ASP DOUBLE EDGE BLADE	2
6	BSA-09368-2	4	WASHER T/S ASP DOUBLE EDGE BLADE	2
7	BSA-09368-3	4	NUT T/S ASP DOUBLE EDGE BLADE	2
8	NSL5158	10	MULCHING TOOTH	2
9	N-0.75UNC-NY	8	NYLOCK NUT [3/4-10 UNC]	2
10	N-M16C-NY	8	NYLOCK NUT [M16x2]	2
11	-	10	HEX BOLT || 1/2"x1.75"	2
12	-	8	HEX BOLT || 3/4"x2.25"	2
13	-	4	HEX BOLT || 3/4"x2.5"	2
14	-	8	HEX BOLT || M16x65	2
15	-	10	PLAIN WASHER || 1/2"	2
16	-	20	PLAIN WASHER || 3/4"	2
17	-	16	PLAIN WASHER || M16	2
18	-	4	SPRING LOCK WASHER || 3/4"	2

Copyrights © 2025 Norm Engineering

Diagram 2

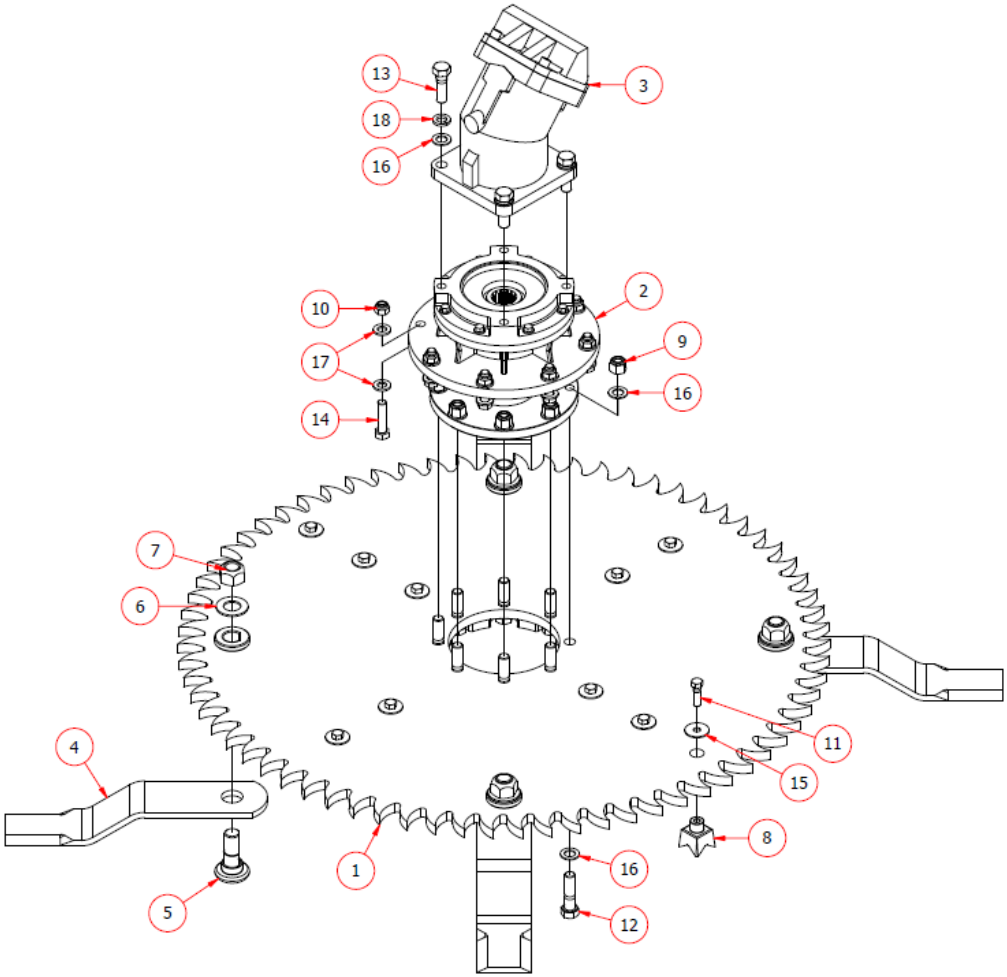

Copyrights © 2025 Norm Engineering

11 APPENDICES

11.1 SAFETY SIGN LOCATIONS

Item	Description
1	Warning | Pinch point
2	Danger | High pressure fluid
3	Warning | Attachment can contact machine
4	Danger | Read the Manual
5	Warning | Stay back 100m

ITEM 1

ITEM 2

ITEM 3

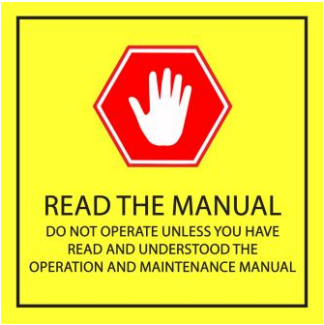

ITEM 4

Copyrights © 2025 Norm Engineering

ITEM 5

Instructions

- Keep all safety signs clear and legible.
- Replace all missing, illegible, or damaged safety signs.
- When replacing parts which have safety signs attached make sure the replacement part has the safety sign.

Copyrights © 2025 Norm Engineering

12 WARRANTY

12.1 DEFINITION

“Dealer” means a dealer that purchases products directly from Norm Engineering Pty Ltd.

“End consumer” means a consumer that purchases products either directly from Norm Engineering Pty Ltd or directly from a “dealer” as defined above.

“Products” includes goods and services.

12.2 WARRANTY

Norm Engineering Pty Ltd welcomes you as a purchaser of its products. All Norm Engineering products are designed to ensure the highest standards, reliability, and performance.

Norm Engineering Pty Ltd warrants hydraulic cylinders against defects in manufacture for a period of twelve months from date of sale by the dealer or Norm Engineering Pty Ltd to the end consumer. The warranty in relation to hydraulic cylinders ceases upon the occurrence of damage to the piston rod of the hydraulic cylinder.

No warranty applies to hoses, tubes, and fittings in relation to any of the products.

Norm Engineering Pty Ltd warrants all its other products against defects in manufacture for a period of twelve months from the date of sale by the dealer or Norm Engineering Pty Ltd to the end consumer.

Norm Engineering Pty Ltd will, subject to the terms of this warranty, in relation to defective goods:

a) replace the defective goods at no cost to the end consumer; or

b) repair the defective goods at no cost to the end consumer; or

c) pay the cost of having the defective goods repaired.

Norm Engineering Pty Ltd will, subject to the terms of this warranty, in relation to defective services:

Copyrights © 2025 Norm Engineering

a) supply the services again to the end consumer at no cost to the end consumer; or

b) pay the cost of having the service supplied again to the end consumer.

Warranty claims may be sent either to Norm Engineering Pty Ltd., P.O. Box 178, Mt Ommaney, Qld. 4074 or to the dealer.

All warranty periods shall commence from the date of sale by Norm Engineering Pty Ltd or the dealer to the end consumer. It is the end consumer's responsibility to establish the date of sale of the product to the end consumer by the dealer.

The end consumer may establish the date of sale by producing to Norm Engineering Pty Ltd the dated contract of sale between the end consumer and the dealer with its warranty claim.

If the end consumer is not able to establish the date of sale of the product to the end consumer by the date of its warranty claim, the warranty period shall be deemed to commence from the date of sale of the product by Norm Engineering Pty Ltd to the dealer.

This warranty will not apply if the end consumer does not use the product in accordance with Norm Engineering Pty Ltd.'s recommendation.

This warranty will not apply if the end consumer does not use products applied or fitted to any machine, equipment, or plant, in accordance with Norm Engineering Pty Ltd.'s operating recommendation for the product.

This warranty does not apply to any loss or damage caused through consequential neglect. Unless the end consumer indicates to Norm Engineering Pty Ltd prior to purchasing the product that it intends to use the product for a particular purpose, there is no implied warranty that the product will fit for that particular purpose. Ask Norm Engineering for clarification of the intended use is not included in the manual.

Only a dealer authorised in writing, or issued with an order number, by Norm Engineering Pty Ltd may conduct warranty repairs. Prior written approval must be obtained from Norm Engineering Pty Ltd before warranty repairs are conducted. Norm Engineering Pty Ltd will not recognise any warranty claim for reimbursement

Copyrights © 2025 Norm Engineering

of repair costs unless the repairs have been conducted by an authorised dealer with prior written approval from Norm Engineering Pty Ltd to conduct the repairs.

Norm Engineering Pty Ltd limits its liability, as follows:

1) Pursuant to Section 68A of the Trade Practices Act 1974, this clause applies in respect of any of the goods or services supplied under this contract which are not of a kind ordinarily acquired for personal, domestic, or household use or consumption, provided that this clause will not apply if the end consumer establishes that reliance on it would not be fair and reasonable.

2) Liability for breach of a condition or warranty implied into this contract by the Trade Practices Act 1974 other than a condition implied by Section 69 is limited:

a) In the case of goods, to any one of the following as determined by Norm Engineering Pty Ltd:

i. the replacement of goods

ii. the repair of the goods

iii. the payment of the cost of having the goods repaired, excluding travelling and freight charges.

b) In the case of services, to any one of the following as determined by Norm Engineering Pty Ltd.

i. the supplying of the services again; or

ii. the payment of the cost of having the services supplied again.

Expenses incurred by the end consumer in connection with making a warranty claim shall be borne by the end consumer unless otherwise agreed by Norm Engineering Pty Ltd.

To the extent permitted by law, all implied conditions, and warranties in the contract of sale between Norm Engineering Pty Ltd and the end consumer are hereby excluded.

Copyrights © 2025 Norm Engineering

The benefits conferred by this warranty on the end consumer are in addition to all other legal rights and remedies that the end consumer has in respect of the products.

Contracts of sale for products, and this warranty are submitted to the exclusive authority of the courts of Queensland.

Copyrights © 2025 Norm Engineering