MANUFACTURER OF EARTHMOVING ATTACHMENTS | VERSION: 1.0C

APACHE

OPERATION AND MAINTENANCE MANUAL

NORM ENGINEERING

BRISBANE
PH: 07 3376 3177
SALES@NORMENG.COM.AU
787 BOUNDARY ROAD
DARRA QLD 4076

MELBOURNE
PH: 03 9775 1965
VICSALES@NORMENG.COM.AU
2/45 FRANKSTON GARDENS DRIVE
CARRUM DOWNS VIC 3201

SYDNEY
PH: 02 7246 7838
NSWSALES@NORMENG.COM.AU
2/3 CONTAPLAS STREET
ARNDELL PARK NSW 2148

NEW ZEALAND
PH: +64 7 889 7080
SERVICE@NORMENG.CO.NZ
14/2582 STATE HIGHWAY 26
MORRINSVILLE 3372

Contents

1 Introduction 1
2 Safety Definitions: Terms and Symbols 2
3 Safety Instructions 3
3.1 Important Points 5
4 Predelivery 6
4.1 Check Pickup Fit 6
4.2 Check Range of Motion 6
4.3 Check Hydraulic Hoses 7
4.4 Hydraulic Motor Running-in 7
5 Assembly Instructions 8
5.1 Hitching Up the Apache Slasher Mulcher 8
5.2 Removing the Apache Slasher Mulcher 9
6 Operating Instructions 10
6.1 Starting the Slasher 10
6.2 Specified Operations and Limitations 10
6.3 Auxilary Hydraulic Requirements 10
6.3.1 Commecting the Case Drain 11
6.4 Reasonably Forseeable Misuse 12
6.5 Cutting Technique 12
6.6 Skid Adjustment 14
7 Maintenance and Care 15
7.1 Hydraulics 15
7.2 Prior to Use 15
7.3 Routine Inspection (Every 12 Weeks) 16
7.4 Gearbox Maintenance 16
7.5 Cutting System Mantenance 17
7.5.1 Blade Removal 17
7.5.2 Blade Installation 19
7.5.3 Disc Disassembly 20

Copyright © Norm Engineering

7.5.4 disc Hub Assembly & Installation 21
8 Risk Assessment 23
9 Parts 30
9.1 Ordering Parts 30
9.1.1 Reference Information 30
10 Parts List 31
11 Appendices 43
11.1 Safety Sign Locations 43
12 Warranty 44
12.1 Definition 44
12.2 Warranty 44

Copyright © Norm Engineering

1 INTRODUCTION

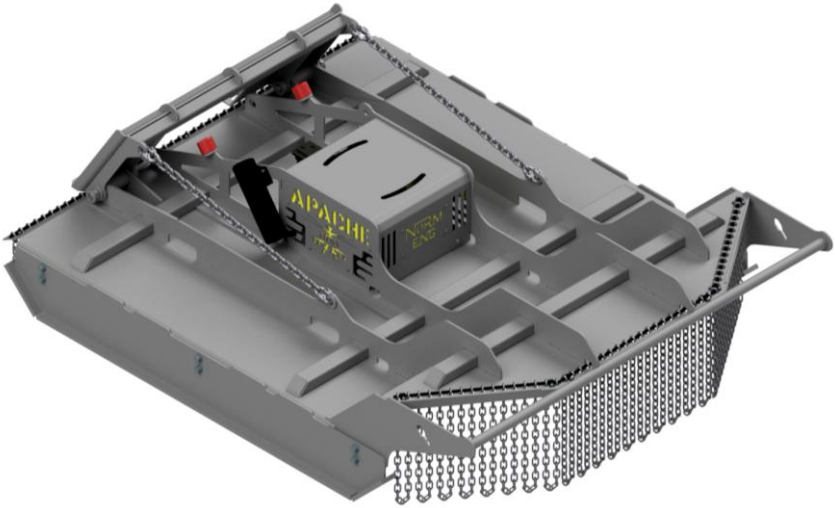

6ft Apache Slasher Mulcher

Congratulations on purchasing a Norm Engineering Pty Ltd attachment. We have designed this Apache Slasher Mulcher for a long, productive, and safe life. Your attachment will provide you with years of service provided regular maintenance and correct usage is applied.

This manual offers a guide on how to safely assemble, mount, operate and maintain your Apache Slasher Mulcher. While the manual attempts to cover most situations, there are many unforeseen risks and events that are not included due to the capability of the Apache Slasher Mulcher. On this basis the owner and/or operator must determine if this attachment is suited for a particular purpose.

Norm Engineering Pty Ltd can accept no responsibility or liability for how you operate your equipment: we can only provide warning notes and safety precautions in relation to the standard operation of the Apache Slasher Mulcher.

The illustrations and data used in this manual were current at the time of printing but due to engineering and/or production changes, this product may vary slightly. Norm Engineering Pty Ltd reserves the right to redesign and/or change components as may be necessary without notification.

Copyright © Norm Engineering

2 SAFETY DEFINITIONS: TERMS AND SYMBOLS

We will use the ANSI Z535.4-2011(R2017) standard for the definitions of signal words as described in conjunction with colours red, orange, and yellow. These are used with the Safety Alert Symbol:

- **Signal word:** Are defined as the words used in the signal word panel. The signal words for hazard alerting signs are “DANGER”, “WARNING”, and “CAUTION”. Safety notice signs use the signal word “NOTICE”. Safety instruction signs use signal words that are specific to the situation.

- **DANGER:** Indicates a hazardous situation, which, if not avoided, **will** result in death or serious injury. This signal word is to be limited to the most extreme situations. (White letters on a red background)

- **WARNING:** Indicates a hazardous situation, which, if not avoided, **could** result in death or serious injury. (Black letters on an orange background)

- **CAUTION:** Indicates a hazardous situation, which, if not avoided, **could** result in minor or moderate injury. (Black letters on a yellow background)

- **NOTICE:** Indicates information considered important, but **not** hazard-related (e.g., messages relating to property damage). (White letters on a blue background)

- **SAFETY INSTRUCTIONS**: Indicates a type of safety sign, where specific **safety-related instructions** or **procedures** are described. More definitive signal words are encouraged, where practical (e.g., SAFE SHUTDOWN PROCEDURE, SAFE OPERATING PROCEDURE). (White letters on a green background)

Copyright © Norm Engineering

3 SAFETY INSTRUCTIONS

⚠ WARNING

Obey all the safety instructions listed in this section and throughout this manual. Failure to follow instructions could result in death or severe injury.

NOTICE

Before attempting any type of assembly operation, maintenance, or other work on or near this product:

- READ and COMPLETELY UNDERSTAND:
  - This manual,
  - The manuals provided with the power unit being used with this attachment.
- Read and understand all safety signs associated with the equipment being used.
- Know all your controls and know how to suddenly stop all power unit movement, the attachment movement, and the engine in case of an emergency.

SAFETY IS YOUR RESPONSIBILITY AS THE OPERATOR OF THE EQUIPMENT

Improper or negligent utilisation of an Apache Slasher Mulcher may result in severe injury or trauma. The operator is required to possess all applicable industry credentials, certifications, qualifications, and licenses necessary for safe and compliant operation.

The operator is required to possess comprehensive knowledge of their duties and obligations as specified under the pertinent legislation and regulatory framework established by the governing authority. Non-compliance with these statutory obligations may lead to legal proceedings and potential prosecution.

As the equipment operator, you are responsible for thoroughly familiarising yourself and all personnel involved in the assembly, operation, maintenance, or presence in the vicinity of this product with the safety information delineated within this manual. It is imperative to ensure that all operators and maintenance personnel have a comprehensive understanding of, and access to, the entire

Copyright © Norm Engineering

and accurate contents of this manual as well as the associated power unit documentation.

The power unit operating manual typically delineates specific safety precautions and procedural steps that must be followed prior to attaching equipment to ensure personnel safety.

Perform a comprehensive site assessment during the planning stage of the construction project to identify potential safety hazards and establish and implement appropriate risk mitigation measures to ensure worker protection.

Accidents are avoidable through diligent and responsible operation of equipment. The effectiveness of any accident prevention program is contingent upon the full commitment and active cooperation of the individual solely responsible for operating the equipment.

Ensure that all personnel engaged in the installation, maintenance, repair, disassembly, and storage of this equipment adhere to the relevant provisions of the Workplace Health and Safety Act. This obligation encompasses verifying that such individuals have undergone sufficient training in the safe operation of this equipment and the corresponding power unit to which this attachment is intended to be connected.

Adhere to established safe work practices, including but not limited to:

- Optimising the physical workspace by ensuring it is well-illuminated, level, clean, and dry to facilitate safe operations.
- Utilising properly grounded, assessed, and tagged electrical outlets and tools to mitigate electrical hazards.
- Selecting appropriate tools specifically designed for the task to ensure safety and efficiency.
- Verifying that tools are maintained in optimal condition and suitable for the intended function.
- Employing appropriate Personal Protective Equipment (PPE), such as hardhats, safety glasses, gloves, and protective footwear, as mandated by tool manufacturers.
- Handling hot attachments with heat-resistant gloves after exposure to sunlight to prevent thermal burns.
- Conducting a thorough job assessment prior to commencement, including estimating duration, assessing complexity, and defining the optimal procedure.
- Confirming that personnel possess adequate capacity, training, and competence to perform the assigned tasks safely.

Copyright © Norm Engineering

- Identifying all potential hazards and implementing appropriate control measures to mitigate risks.
- Maintaining clear and concise communication among all personnel to ensure situational awareness.
- Establishing and rehearsing explicit emergency stop protocols to prevent confusion during emergency situations.
- Ensuring he installation and utilisation of wheel chocks, securing frameworks, and other lockout devices to immobilize power unit and attachments during maintenance operations.

3.1 IMPORTANT POINTS

During the utilisation of the power unit in any form of assembly, operation, maintenance, or related activities conducted on or in proximity to this product:

- Prior to departing from the operator's station or commencing any maintenance or operational procedures on this equipment, ensure the device is lowered to the ground surface, engage the parking brake of the power unit, shut down the engine, remove the ignition key, and allow all moving parts to come to a complete stop. Subsequently, release all residual hydraulic pressure within the system lines. Consult the manufacturer's operating manual for detailed instructions on the procedures for attaching equipment and safely depressurizing hydraulic lines.
- Verify the maximum allowable lifting and operational capacities of the power unit and compare these limits to the total weight of the attachment. Refer to the operator's manual of the power unit to confirm safe operational thresholds.
- Restrict personnel presence to the operator and only when the equipment or the product is in motion. Maintain a clear work area free of personnel during operation.
- Adhere strictly to all applicable safety protocols concerning operator protection and equipment operation.
- Operate all control mechanisms exclusively from the operator's station.
- Maintain continuous operator presence when the engine is active or when the power unit elevates the attachment.
- Reduce operational speeds when operating under conditions involving additional load weight or increased width, particularly over uneven terrain.
- In environments where dust accumulation presents a concern, decrease machine travel speed accordingly.
- During transit, keep the attachment close to ground level and manage movement to ensure control and stability.

Copyright © Norm Engineering

4 PREDELIVERY

The following procedure shall be executed during the initial installation of this attachment onto a power unit. Omission of these verification steps may result in damage to the attachment and the power unit and pose safety hazards. Warranty claims arising from the failure to adhere to these procedures may be subject to denial.

4.1 CHECK PICKUP FIT

Execute step “5.1 Hitching Up the Apache Slasher Mulcher," to verify the proper engagement and fitment of the attachment onto the coupler. Inspect the following aspects:

- Confirm that the securing pins are properly engaged and locked.
- Ensure that the attachment fits the coupler with minimal play, indicating a snug and secure connection.

4.2 CHECK RANGE OF MOTION

Securely couple the attachment to the power unit and check the full range of motion to ensure smooth operation without obstruction. Plan movements carefully to avoid unintended contact. Be aware that certain mechanisms, such as a tilting function, may increase the power unit’s range of motion during operation but can also cause the attachment to come into contact with the power unit. Always account for these potential interactions when planning and executing movements to maintain safe operation.

Copyright © Norm Engineering

4.3 CHECK HYDRAULIC HOSES

If there is uncertainty regarding the routing of the hydraulic hoses, consult Norm Engineering. Connect the hoses and subsequently perform a comprehensive assessment of the entire range of motion to verify that:

- No tension or pulling occurs on hoses.
- The hoses are not excessively long, allowing proper operation without interference.

If the hose length is found to be improper, contact Norm Engineering prior to proceeding for technical assistance.

4.4 HYDRAULIC MOTOR RUNNING-IN

To maximise the life of the unit, it must be run in for a period. To conduct the running in procedure, suspend the slasher just off the ground in a horizontal working position. Ensure there are no bystanders within the nominated radius as defined in the risk assessment completed prior to commencing any works.

Operate the motor at 30% of rated pressure for 20 minutes before application of full operating load.

Copyright © Norm Engineering

5 ASSEMBLY INSTRUCTIONS

WARNING Obey all instructions listed in this section of the manual. Failure to follow the instructions listed below could lead to serious injuries. For any assistance with the following processes, please contact Norm Engineering.

5.1 HITCHING UP THE APACHE SLASHER MULCHER

DANGER All safety precautions pertaining to both the power unit and the Apache Slasher Mulcher need to be followed. Sufficient planning should be made prior to any work commencing in case of an emergency situation.

1. Before beginning any work on this product, lower the product to the ground on a firm level surface that is large enough to accommodate this product, the power unit and all workers involved in the hitching up the Apache Slasher Mulcher.
2. Refer to your power unit's operating manual for instructions on hitching up this attachment. Visually inspect to ensure the attachment is fully engaged to the power unit hitch.
3. Engage the locking mechanism. A visual inspection should be performed to confirm all locking systems are secured. Give the Apache Slasher Mulcher a few short sharp movements close to the ground to ensure it is engaged.
4. Rest the attachment on the ground and refer to the power unit operating manual to release the pressure in the hydraulic system.
5. Connect the hydraulic couplings on the Apache Slasher Mulcher to the power unit couplings following all safety precautions specified in the power units operating manual.
6. Start the machine and cycle the Apache Slasher Mulcher hydraulic motor several times before taking it near other personnel.

Copyright © Norm Engineering

5.2 REMOVING THE APACHE SLASHER MULCHER

DANGER All safety precautions pertaining to both the power unit and the Apache Slasher Mulcher need to be followed. Sufficient planning should be made prior to any work commencing in case of an emergency situation.

1. Remove the machine from anywhere near other personnel and onto a firm level surface large enough to safely accommodate this product, the power unit and all workers involved in removing the Apache Slasher Mulcher.
2. Rest the Apache Slasher Mulcher on the ground.
3. Disconnect the attachments hydraulic couplings from the power unit following all safety precautions. Refer to your power unit's operating manuals.
4. Disengage the locking mechanism. A visual inspection should be performed to make sure the Apache Slasher Mulcher is fully disengaged.
5. Refer to your power unit's operating manual for instructions on removing the attachment and confirm the hitch is fully disengaged from the Apache Slasher Mulcher.
6. Store safely.

Copyright © Norm Engineering

6 OPERATING INSTRUCTIONS

DANGER

When operating the Apache Slasher Mulcher, all personnel must wear appropriate personal protective equipment (PPE). Maintain a safe distance, ensuring all personnel remain clear of the equipment during operation. Contact with the attachment, the power unit, or exposure to projectiles such as debris and dust may result in injury to individuals in proximity to the mulcher.

WARNING

- **USED** for slashing and mulching grass **ONLY** and not for any other purposes.
- **REFER** to the power unit manual to ensure you follow all the limits.

CAUTION

- **ENSURE** the skids of the Slasher Mulcher are in contact with the ground at **ALL** times when the blades of the Slasher Mulcher are in motion.
- **ENSURE** that all safety chains and guards are intact and undamaged.
- **ENSURE** that the slasher is only ever used for its intended purpose, it is not designed to carry any load whatsoever.

6.1 STARTING THE SLASHER

NOTICE

ALWAYS engage the slasher with the engine at idle and then gradually increase the revs until you reach operating speed. Starting the slasher with the high engine revs may cause damage to the slasher's drive train and will lead to premature failure.

6.2 SPECIFIED OPERATIONS AND LIMITATIONS

DANGER

The Apache Slasher Mulcher is NOT to be used:

- to carry people.
- as a lifting point.
- to pull or push over objects.
- to trim hedges or bushes.

Misuse may damage the attachment or lead to injury and trauma.

6.3 AUXILARY HYDRAULIC REQUIREMENTS

Copyright © Norm Engineering

DANGER Exceeding the hydraulic flow rates and pressures provided below **WILL** cause damage to your slasher and **MAY** cause injury and/or death. This damage is not covered by the warranty provided with your slasher.

NOTICE If your machine is not capable of producing the flow rates and pressures provided below the slasher will not cut the grass cleanly.

Motor			
Gearbox			
Minimum Pressure [PSI]		**Maximum Pressure [PSI]**	
Minimum Flow [LPM]		**Maximum Flow [LPM]**	

6.3.1 COMMECTING THE CASE DRAIN

If your machine has a case drain breakaway line installed, it is recommended you connect the case drain coupling – even if the auxiliary flow is less than those stated in the table below.

If your machine **DOESN'T** have a case drain breakaway port, the slasher can be used as long as the flow remains below the figures listed in the table below.

Motor Model	Auxiliary flow [LPM] (If flow exceeds this value, case drain is mandatory)
80CC [B8704]	40
100CC [B8705]	50
160CC [B8706]	60
200CC [B8710]	70

Copyright © Norm Engineering

6.4 REASONABLY FORSEEABLE MISUSE

DANGER Misuse of the slasher significantly increases the risks involved in the operation. It is the responsibility of the operator to ensure the activity they are undertaking is safe, not only for themselves but for other persons in the area.

Misuse of the slasher will invalidate the warranty offered by Norm Engineering. Cost of repairs will be the sole responsibility of the equipment owner.

Foreseeable misuses include but are not limited to:

- **OPERATING** the slasher off the ground.
- **OPERATING** the slasher at an angle to the ground. For example, never roll the slasher back or forward during operation. The slasher skids should always remain in contact with the ground.
- **USING** the slasher to cut vegetation other than grass. This **WILL** cause damage to the slasher and **COULD** cause an injury or fatality.

DANGER

- **OPERATING** the slasher **WITHOUT** performing section “7.2 Prior to Use.”

6.5 CUTTING TECHNIQUE

During operation, the slasher skids should be kept parallel and in close proximity to the ground at all times. To extend the life of the slasher body, the slasher should be operated with minimal pressure between the skids and the ground. This operating technique will reduce the wear in skids and should provide a better finish.

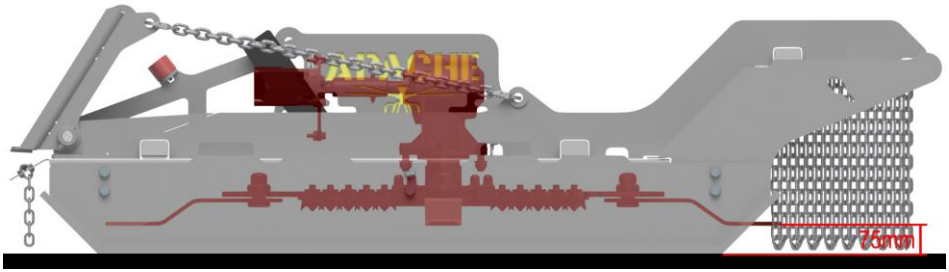

As the slasher is a hydraulically powered attachment, the performance of the slasher depends on the available hydraulic power of the power unit. If the cutting

Copyright © Norm Engineering

conditions are extremely tough and the slasher is struggling to cut the grass cleanly, it is recommended to take a narrower cut. This will require less power and create space for the cut grass to clear itself out the rear of the slasher.

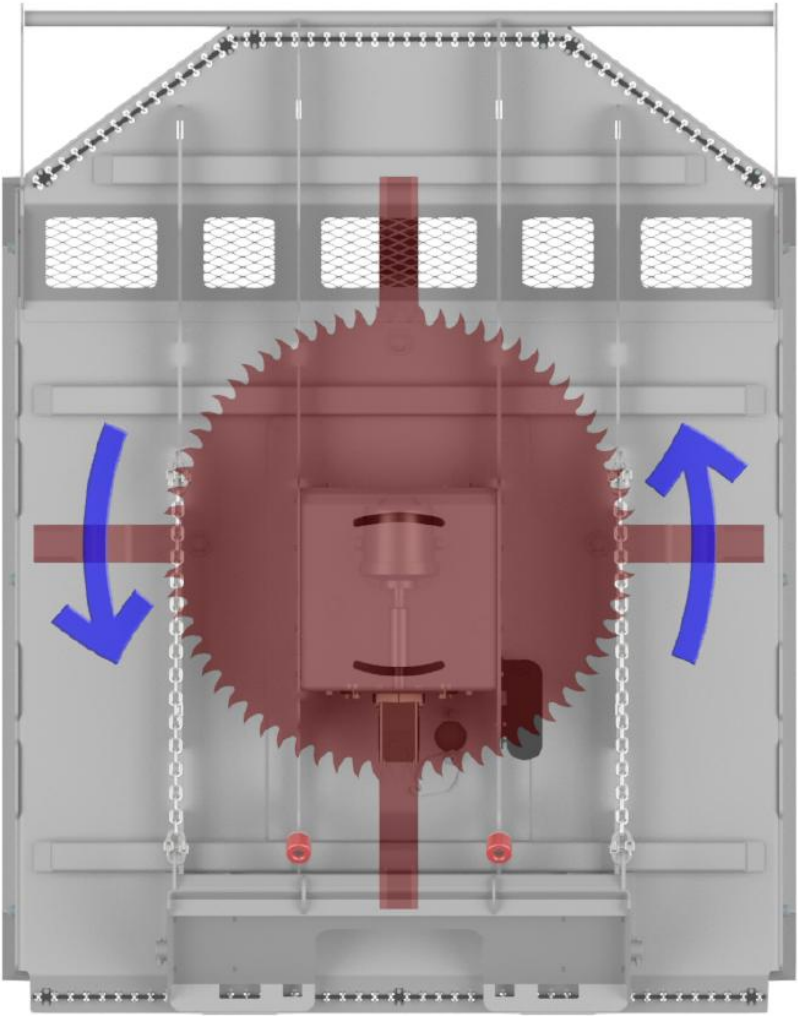

The slasher rotates anticlockwise (looking from above), and so material will discharge out the left-hand rear corner of the slasher. To maximise performance, when taking a partial cut, ensure the uncut grass is on the right-hand side of the slasher.

Copyright © Norm Engineering

6.6 SKID ADJUSTMENT

The Apache Slasher Mulcher comes with reversable side skids which can be both swapped from lefthand to righthand side and vice versa. The side skids are also able to be flipped around on each side to reverse the outside to inside position. Both of these are achieved by removing the six nuts and bolts mounting the plate.

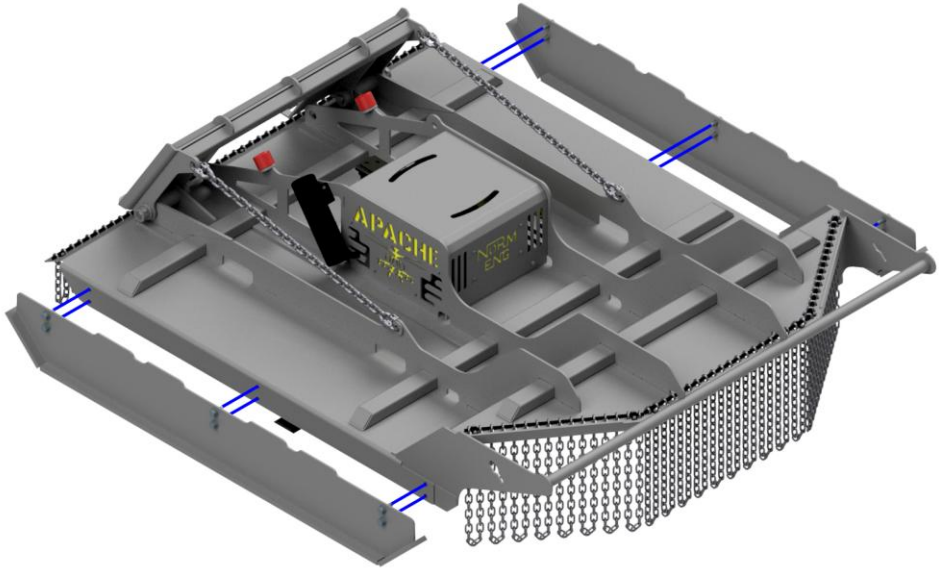

Copyright © Norm Engineering

7 MAINTENANCE AND CARE

WARNING

BEFORE commencing maintenance, place the attachment on level ground. Ensure enough area to perform maintenance on the attachment. Follow ‘5.2 Removing the Apache Slasher Mulcher’.

WARNING

AFTER maintenance is complete, follow ‘5.1 Hitching Up the Apache Slasher Mulcher’.

7.1 HYDRAULICS

WARNING

Read and understand all safety requirements prior to beginning any maintenance to any hydraulic connections. It is imperative that if there are any fittings, repairs etc. required these must be conducted by a fully certified and qualified hydraulics fitter.

7.2 PRIOR TO USE

Prior to use, the Apache Slasher Mulcher shall be visually inspected to verify the attachment is in an operational state. The inspection will check for:

- Signs of wear, including corrosive and abrasive wear.
- Markings are legible.
- Welds are not damaged, cracked or worn,
- Hydraulic hoses, fittings, gearbox, clutch, and motor are in good condition with no leaks.
- All fasteners are in place and correctly torqued.

DANGER

Pay particular attention to the bolts that secure the blades. These must be correctly torqued and undamaged to ensure safe operation of the slasher.

- Inspect the wear on the skids.
- Grease all fittings – this needs to be performed on a daily basis.

DANGER

If the slasher **DOES NOT** pass any of the above checks **DO NOT** operate the slasher until they are remedied.

Copyright © Norm Engineering

7.3 ROUTINE INSPECTION (EVERY 12 WEEKS)

Routine inspections should include but is not limited to the following:

- Fittings, hoses, and hydraulics must be checked to ensure there are no leaks.
- Pins and bushes should be inspected for signs of excessive wear and replaced before the wear damages the structure of the Apache Slasher Mulcher.
- Inspect the attachment for wear, particularly around the skids, blades, and seek advice on repairs if wear is excessive.
- Check to ensure attachment markings are legible.
- Organise for a certified and qualified hydraulics fitter to inspect and replace hydraulic hoses and seals in the hydraulic parts, as necessary. For additional information refer to section ‘12 Warranty’.

7.4 GEARBOX MAINTENANCE

The gearbox oil should be changed after the first 50 hours of use and every three hundred hours thereafter. If the slasher is not used on a regular basis, the oil should be changed at least once every 12 months.

The oil used in the gearbox should be SAE 80W-90 gear oil.

A suction gun will be required to remove the old oil from the gearbox whenever an oil change is performed.

Copyright © Norm Engineering

7.5 CUTTING SYSTEM MANTENANCE

DANGER

- Do **NOT** use blocking material that could collapse or shift.
- Do **NOT** use wood or steel blocking that shows signs of decay or damage.
- Do **NOT** use blocking that is warped, twisted, or tapered.
- **ALWAYS** ensure a safe working environment before replacing any slasher component.
- **ALWAYS** use **new fasteners** when reassembling.
- Removing or installing the cutting disc may cause misalignment, and imbalances, leading to catastrophic failure.
- Maintenance of the cutting disc should be conducted by a qualified professional.

7.5.1 BLADE REMOVAL

Maintenance of the blades and inspection of the fasteners used can be done without the removal of the disc.

1. Refer to Section 5.2 Removing the Apache Slasher Mulcher. Place the attachment on level ground with secure supports to allow safe access to the blades.
2. Loosen the locking bolt securing the inspection port cover, then rotate the inspection plate allowing access to the cutting disc assembly.
3. Manually rotate the disc until the blade fastener is positioned beneath the inspection port.
4. Using an extended socket wrench, loosen the fastener nut. Tap gently on the bolt head to release it from the assembly.
5. Detach the blade from the bolt and place the fastener safely on the ground.
6. Repeat steps 3–5 for each additional blade as required.

Copyright © Norm Engineering

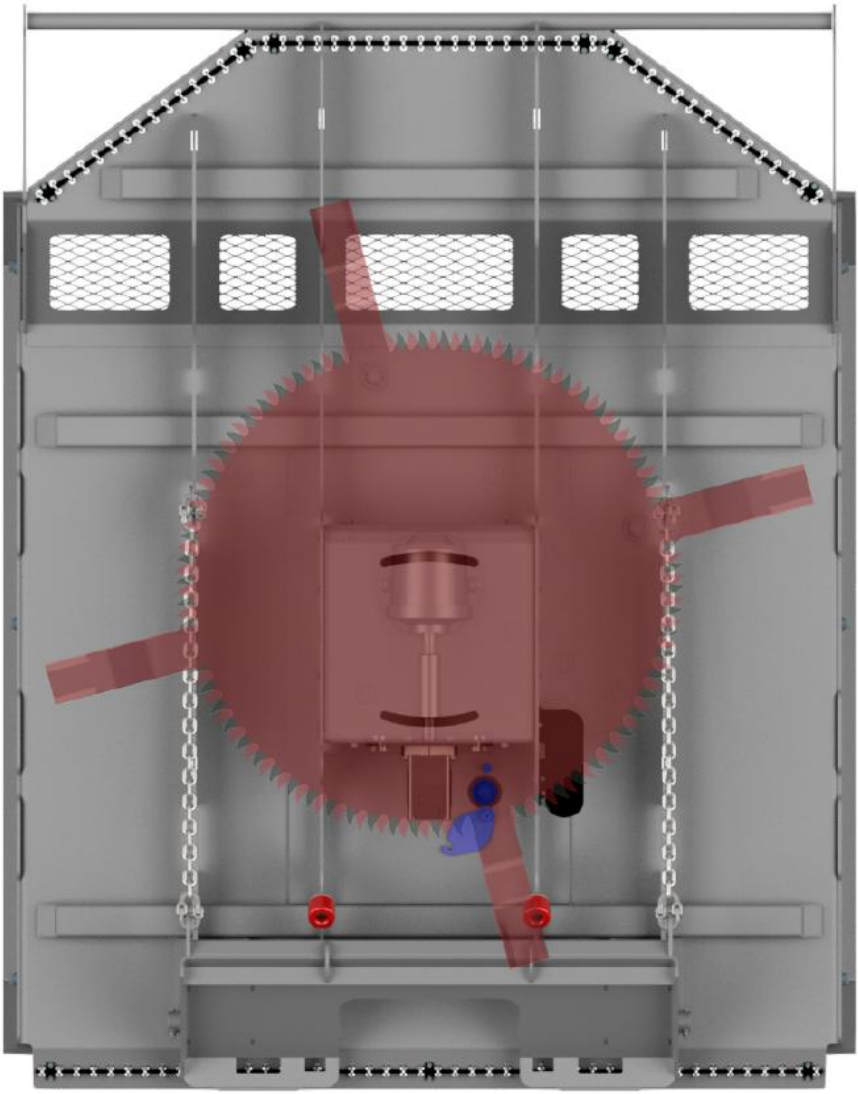

Copyright © Norm Engineering

7.5.2 BLADE INSTALLATION

1. Refer to procedure 5.2 Removing the Apache Slasher Mulcher. Place the attachment on level ground with secure supports to allow safe access to the blade mounting points.
2. Check all new fasteners to ensure they are clean, dry, and free of contaminants or lubrication.
3. Loosen the locking bolt securing the inspection port cover, then rotate the inspection plate allowing access to the disc assembly.
4. Manually rotate the disc until the blade locking bush is positioned beneath the inspection port.
5. Position the slasher blade on the locking bolt and insert the bolt into the disc locking bush. Rotate the bolt until proper alignment is achieved and the bolt is fully seated.
6. Through the inspection port, fasten the bolt with a new conelock nut. Torque the nut to **1000Nm**, ensuring the conelock thread is fully engaged.
7. Rotate the blade assembly and repeat Steps 4–6 until all blades have been installed.
8. Rotate the inspection port cover back into position and secure it by tightening the locking bolt.
9. Refer to procedure 5.1 Hitching Up the Apache Slasher Mulcher. Operate the attachment at low speed initially, monitoring closely for excessive vibration before resuming normal use.

Copyright © Norm Engineering

7.5.3 DISC DISASSEMBLY

1. Refer to Section 5.2 Removing the Apache Slasher Mulcher. Place the attachment on level ground with adequate supports to brace the attachment and grant access to the disc assembly beneath.
2. Ensure the disc is supported to prevent it from dropping once the securing bolts are removed. Secure the blades against the central disc to restrict movement.

   Note: This operation requires careful planning, as the disc is extremely heavy
3. Using an extended-handle wrench, hold the nylock nuts in place while loosening the eight bolts securing the disc assembly to the hub with a socket wrench.
4. Carefully lower the cutting disc assembly to the ground and move it to an open, stable working area.
5. Remove hex bolts holding mulching teeth to disc.
6. Unbolt and remove the castle nut securing the hub to the gearbox.
7. Detach the hub from the gearbox shaft and store it safely in a designated area.

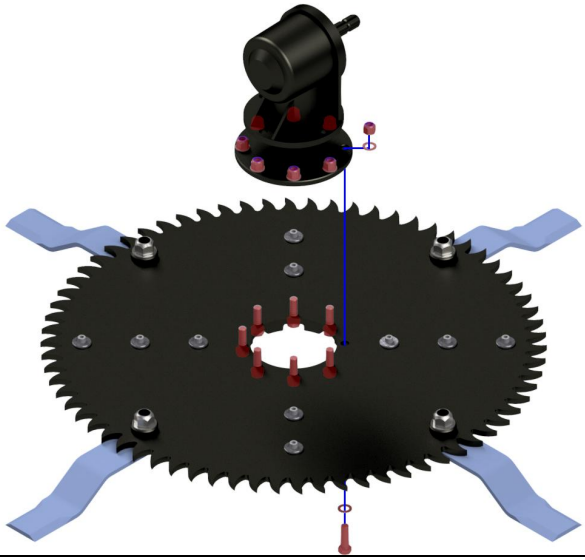

Copyright © Norm Engineering

7.5.4 DISC HUB ASSEMBLY & INSTALLATION

1. Refer to procedure 5.2 Removing the Apache Slasher Mulcher. Place the attachment on level ground with secure blocking to allow safe access to the blades.
2. Check all new fasteners to ensure they are clean, dry, and free of contaminants or lubrication.
3. Lift hub onto gearbox spline and secure with castle nut torqued to **290Nm**.

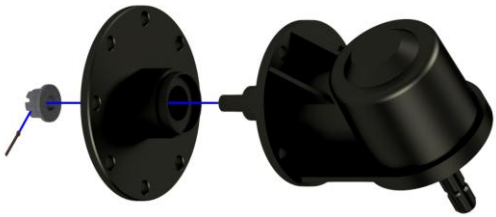

4. Place Mulching tooth in locking plate, place spacing washer on hex bolt before applying blue Loctite and securing tooth with bolt torquing to **128Nm**. Repeat for all ten teeth.
5. Position the slasher blade on the locking bolt and insert the bolt into the disc locking bush. Rotate the bolt until proper alignment is achieved and the bolt is fully seated. Torque conelock nut to **1000Nm**, ensuring the conelock thread is fully engaged. Repeat for all four blades.

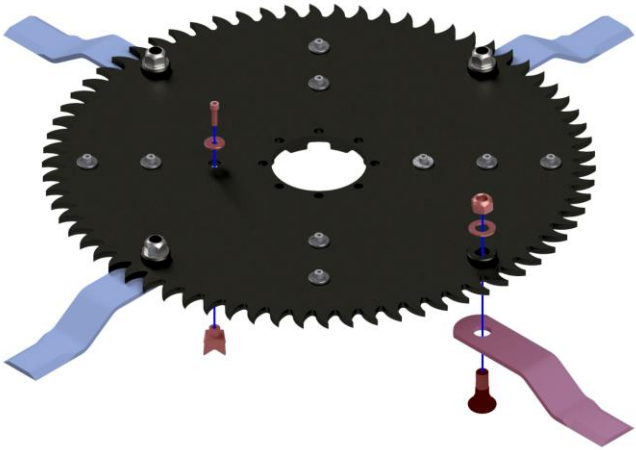

Copyright © Norm Engineering

6. Move disc assembly in position to lift onto the gearbox hub. Secure the blades against the central disc to restrict movement.

   Note: This operation requires careful planning, as the disc is extremely heavy.

7. Position the disc assembly on the gearbox hub. Align the bolt holes between the disc assembly and gearbox hub.

8. Apply blue Loctite to the hex bolts, then secure the disc assembly to the gearbox hub using the bolts, washers and nylock nuts. Torque bolts to **620Nm** in a crosswise pattern to ensure uniform torque. Confirm that no further tightening is required.

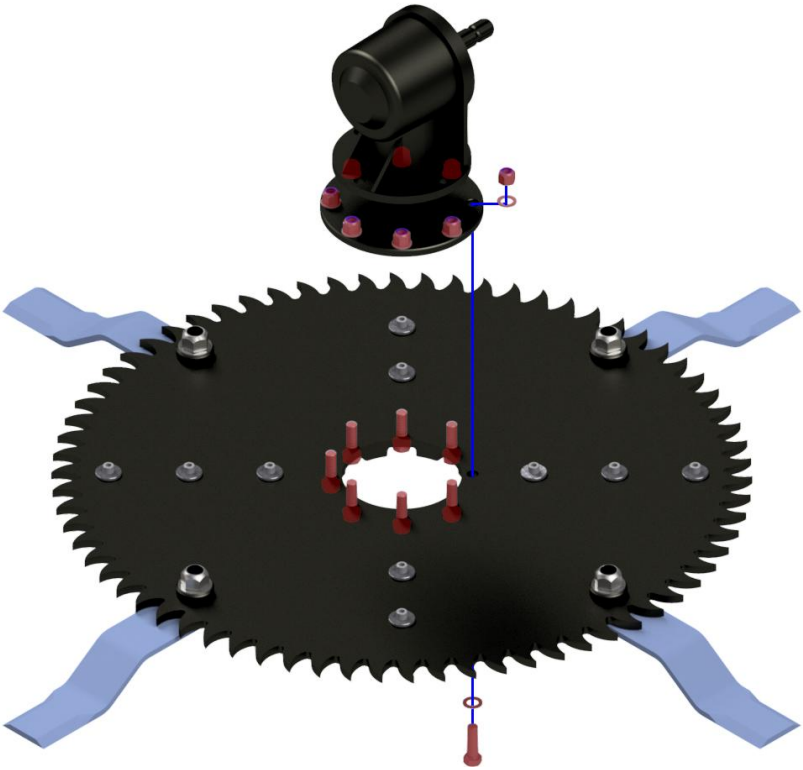

9. Refer to procedure 5.1 Hitching Up the Apache Slasher Mulcher. Operate the attachment at low speed initially, monitoring closely for excessive vibration before resuming normal use.

Copyright © Norm Engineering

8 RISK ASSESSMENT

Assessment Team: Norman Pesch, John Pesch, Sam Ramsden, Chris Tsompanidis

Date of Assessment: 04/12/2025 **Manufacturer:** Norm Engineering Pty Ltd

Location: Brisbane **Contact Person:** Norman Pesch

Attachment: 6ft Apache Slasher Mulcher **Weight:** 900 kg

Intended use: Slashing/Mulching Grass **Construction material:** Steel.

Air Operated: NO **Hydraulic Operated:** YES **Manually operated:** NO

NOTE: When assessing Risk, you MUST consider the following

Inherent Risk:

(Risk before ANY controls). I.e., Before guarding / safety features are fitted.

Residual Risk:

(Risk after controls are fitted). I.e., after guarding / safety features are fitted.

Non-Standard Operating Risk:

(Cleaning, Maintenance). I.e., What other risks can these tasks create.

Predictable Misuse:

I.e., What risks could occur due to misuse of the machine.

HAZARD INFORMATION

The plant must be assessed against the hazards listed for the probability of harm to operators working in close proximity and the environment.

Probability	Consequence	
A – Common or repeating occurrence	1 – Catastrophic	– Fatalities
B – Known to occur or “It has happened”.	2 – Major	– Major injury, LTI
C – Could occur, “I’ve heard of it happening”.	3 – Moderate	– Minor Injury
D – Not likely to occur	4 – Minor	– First aid, slight injury
E – Practically impossible	5 – Insignificant	– Minimal risk of injury

	A	B	C	D	E
1	H	H	H	S	S
2	H	H	S	S	M
3	H	H	S	M	L
4	H	S	M	L	L
5	S	S	M	L	L

H = High

S = Significant

M = Medium

L = Low

Copyright © Norm Engineering

Entanglement:

Is there any potential for hair, clothing, or other loose items to become entangled in moving parts of this attachment during operation or maintenance? **Yes, there is risk of entanglement if SOP's is not followed.**	Yes ☒	No ☐	A B C D E	☐ ☐ ☐ ☒ ☐	1 2 3 4 5	☐ ☒ ☐ ☐ ☐	High Significant Medium Low	☐ ☒ ☐ ☐

Crushing:

Is there a potential for a crushing injury caused by falling equipment, uncontrolled or unexpected movement of the attachment or its load, insufficient ability to slow, stop, or immobilise the power unit, tipping or rollover incidents, contact with moving parts during maintenance, or being trapped, or caught between power unit, attachment, and fixed structures? **Individuals working near the power unit or its attachment during operation may be at risk of being crushed if the operator lacks adequate awareness or loses control of the equipment. This risk is heightened when visibility is poor, communication is unclear, or safety procedures are not properly followed. Effective observation and control are critical to preventing such incidents.**	Yes ☒	No ☐	A B C D E	☐ ☐ ☐ ☒ ☐	1 2 3 4 5	☐ ☒ ☐ ☐ ☐	High Significant Medium Low	☐ ☒ ☐ ☐

Cutting, Stabbing, Puncturing:

Is there a potential for cutting, stabbing, or puncturing caused by contact with the attachment, sharp edges, protrusions, ejected debris, or other unforeseen mechanical hazards during operation or maintenance? **Yes, there are these risks if SOP's is not followed. PPE is also critical to safety.**	Yes ☒	No ☐	A B C D E	☐ ☐ ☐ ☒ ☐	1 2 3 4 5	☐ ☒ ☐ ☐ ☐	High Significant Medium Low	☐ ☒ ☐ ☐

Striking:

Is there a potential for a person to be struck by moving objects due to factors such as ejected work pieces, or uncontrolled or unexpected movement of the power unit or attachment during operation or maintenance? **Yes, there are these risks if SOP's is not followed and people are in close proximity to the power unit or attachment during operation.**	Yes ☒	No ☐	A B C D E	☐ ☒ ☐ ☐ ☐	1 2 3 4 5	☐ ☒ ☐ ☐ ☐	High Significant Medium Low	☒ ☐ ☐ ☐

Copyright © Norm Engineering

Slipping, Tripping, Falling:

Is there a potential for a person working on or around the power unit or attachment to slip trip or fall? **People around the power unit, and attachment risk injury due to uneven or slippery surfaces, or inadequate lighting.**	Yes ☒	No ☐	A ☐ B ☐ C ☐ D ☒ E ☐	1 ☐ 2 ☐ 3 ☒ 4 ☐ 5 ☐	High ☐ Significant ☐ Medium ☒ Low ☐

Shearing:

Is there a potential for a person's body part to be caught and sheared between two moving components of the power unit, or attachment, or the machinery and a fixed structure during operation or maintenance? **People not following SOP's, manual guidelines, and proper training risk injury due to shearing.**	Yes ☒	No ☐	A ☐ B ☐ C ☐ D ☒ E ☐	1 ☒ 2 ☐ 3 ☐ 4 ☐ 5 ☐	High ☐ Significant ☒ Medium ☐ Low ☐

Friction:

Is there a potential for a person to be injured due to contact with the power unit or attachment which has been heated from excessive friction during operation and maintenance? **Yes, there is a risk if SOP's is not followed and the correct PPE worn.**	Yes ☒	No ☐	A ☐ B ☐ C ☐ D ☒ E ☐	1 ☐ 2 ☐ 3 ☒ 4 ☐ 5 ☐	High ☐ Significant ☐ Medium ☒ Low ☐

High Pressure Fluid:

Is there a potential for a person to be injured by coming into contact with high pressure fluid as a result of power unit, or attachment failure, malfunction, or incorrect operation, such as hose rupture, seal failure, or improper connection of hydraulic? **The power unit, and attachment operates using a high pressure hydraulic system. In the event of a system failure people within proximity to this system are at risk of injury.**	Yes ☒	No ☐	A ☐ B ☐ C ☐ D ☒ E ☐	1 ☐ 2 ☒ 3 ☐ 4 ☐ 5 ☐	High ☐ Significant ☒ Medium ☐ Low ☐

Electrical:

Is there a potential for electrical shock or burns due to damaged or poorly maintained electrical components (e.g. leads, switches), the presence of water near electrical equipment, contact with live conductors, inadequate isolation procedures, or other contributing factors? **There is risk of electrical injury whilst operating and performing maintenance of the power unit, if SOP and manuals are not followed.**	Yes ☒	No ☐	A ☐ B ☐ C ☐ D ☒ E ☐	1 ☐ 2 ☐ 3 ☒ 4 ☐ 5 ☐	High ☐ Significant ☐ Medium ☒ Low ☐

Copyright © Norm Engineering

Dust:

Is there a potential health risk from exposure to dust or dangers resultant from obscured vision and communication caused by excessive dust? **Exposure to dust can pose significant health risks, depending on the location and concentration of airborne particles.** **Excessive dust can impair visibility and hinder communication, creating safety hazards. Reduced vision increases the likelihood of accidents.**	Yes ☒	No ☐	A ☐ B ☐ C ☒ D ☐ E ☐	1 ☐ 2 ☒ 3 ☐ 4 ☐ 5 ☐	High ☐ Significant ☒ Medium ☐ Low ☐

Noise:

Is there a potential health risk associated with noise from the operation of a power unit and attachment? **Prolonged excessive noise caused by close proximity to a power unit can lead to long term health concerns. Excessive noise also reduces situational awareness and communication which can lead to accidents.**	Yes ☒	No ☐	A ☐ B ☐ C ☒ D ☐ E ☐	1 ☐ 2 ☐ 3 ☒ 4 ☐ 5 ☐	High ☐ Significant ☒ Medium ☐ Low ☐

Vibration:

Is there a potential health risk associated with power unit or attachment vibration? **The attachment could cause excessive vibration if it is operated whilst damaged or not correctly maintained.**	Yes ☒	No ☐	A ☐ B ☐ C ☒ D ☐ E ☐	1 ☒ 2 ☐ 3 ☐ 4 ☐ 5 ☐	High ☒ Significant ☐ Medium ☐ Low ☐

Environmental:

Is there a potential environmental impact such as pollution, generation of waste materials, or excessive noise caused by the operation and maintenance of the power unit and attachment? **The power unit burns fossil fuels and operates the attachment using a pressurised hydraulic fluid which can be toxic to the environment. The power unit also generates enough noise to impact its surroundings.**	Yes ☒	No ☐	A ☐ B ☐ C ☒ D ☐ E ☐	1 ☐ 2 ☐ 3 ☐ 4 ☒ 5 ☐	High ☐ Significant ☐ Medium ☒ Low ☐

Copyright © Norm Engineering

Risk Evaluation

Overall risk category of plant:	High	Significant	Medium	Low

Risk Controls

Most Desirable

- Elimination - The best way to eliminate the risk is to remove the hazard.
- Substitution - Substitute the hazardous plant with a safer part, alternative process.
- Engineering Controls - Design modification, installation of guarding, automation/ventilation.
- Isolation - Isolate the plant, barricades, crossing, bunting, etc.
- Administrative Controls - Permits, clearances, lock out systems, certification.
- PPE - Short term control measure.

Least Desirable

Hazard	Controls
Entanglement, Crushing, Striking	Engineering Controls – A guard plate has been added to cover any rotating components to prevent accidents from happening. Isolation – Ensure the operating and maintenance manual provided with the attachment recommends the operator of the power unit always follows SOP. The operator must make everybody working in the vicinity of the attachment aware of the dangers and only operate if people are a safe distance away. Administrative Controls – Implement correct attachment training and protocols such as beeping the horn around blind corners to warn possible personnel of your presence. PPE – The use of the correct PPE for the worksite will minimize the damage caused by an incident. Steel cap boots, gloves and tough worksite clothes as an example. PPE – The use of high visibility PPE will help reduce the case of incidents occurring from impaired vision or operator distraction.
Cutting, Stabbing, Puncturing	Isolation – Ensure the operating and maintenance manual provided with the attachment recommends the operator of the power unit always follows SOP. The operator must make everybody working in the vicinity of the attachment aware of the dangers and before moving the attachment ensure people are a safe distance away. PPE – The use of the correct PPE for the worksite will minimize the risk of cutting when working in and around the attachment. Steel cap boots, Gloves and tough work clothes will reduce the risk associated with touching or bumping into sharp edges on the attachment.

Copyright © Norm Engineering

Slipping, Tripping, Falling	Isolation – The attachment has NOT been designed to stand on. This will be stated in the operating and maintenance manual. It is the responsibility of the operator to ensure that no person stands on the attachment. PPE – Wearing the correct work boots will reduce chances of slipping.
Shearing	Engineering Controls – A guard plate has been added to cover any rotating components to prevent accidents from happening. Isolation – Ensure the operating and maintenance manual provided with the attachment recommends the operator of the power unit always follows SOP. The operator must make everybody working in the vicinity of the attachment aware of the dangers, and before moving the attachment ensure people are safe distance away. Administrative Controls – A warning sticker should be placed in visible position on the plant attachment highlighting the potential risk.
Friction	Engineering Controls – A guard plate has been added to cover any rotating components to prevent accidents from happening. PPE – Wearing protective gloves will reduce any damage from touching heated components.
High Pressure Fluid, Electrical	Engineering Controls – Hoses and cables must be routed in a manner that avoids exposure to high-temperature zones, areas of excessive friction, and other hazardous environments. Where complete avoidance is not possible, protective measures such as hose socks, abrasion-resistant sleeves, or thermal shielding shall be applied. Routing should minimize unnecessary bends, tension, or contact with sharp edges, and secure clamps or guides must be used to prevent movement that could lead to wear or damage. These measures ensure that hoses and cables remain protected throughout their service life and reduce the likelihood of premature failure. Administrative Controls – A formal inspection procedure shall be established to identify hose and cable deficiencies before they progress to significant failures. These inspections must be incorporated into routine maintenance schedules and conducted by trained personnel who are able to recognize early warning signs such as wear marks, discoloration, leaks, or fraying. All inspection findings and corrective actions shall be documented to ensure traceability and continuous improvement. In addition, clear escalation protocols must be defined to guarantee the timely replacement or repair of compromised hoses and cables, thereby maintaining system reliability and safety.

Copyright © Norm Engineering

Dust	Isolation and Administrative Controls – To reduce the hazards associated with dust, the manual should instruct the operator to consider their working environment and operate in a manner to reduce the risk of dust being kicked up. This can be managed by operating at a sensible speed. PPE – If the environment is such that the dust cannot be sufficiently controlled, the onsite supervisor should ensure all workers are wearing the correct PPE.
Noise	PPE – To reduce the risk associated with excessive noise the correct PPE should be worn whilst operating or being within a vicinity of the plant and plant attachment during operations.
Vibration	Administrative Controls – A regular maintenance schedule will help prevent from issues such as misalignment or uneven wear which causes excessive vibration.
Environment	Administrative Controls – Regular maintenance procedures shall be implemented to minimize the risk of leaks involving toxic substances. These procedures must include scheduled inspections, servicing, and replacement of components as necessary to ensure system integrity.

Any Modification to Plant Attachment Voids Risk Assessment

Purchaser and User are required to conduct their own risk assessment to identify hazards prior to use.

This risk assessment does not necessarily cover all hazards associated with this product and should be utilized in conjunction with the purchasers and users individual risk assessments to identify all environmental, health, and safety risks associated with specific tasks, locations, and personnel.

Copyright © Norm Engineering

9 PARTS

QUALITY BACKUP

We manufacture 90% of our parts inhouse.
This means we can get your parts to you… quickly.

9.1 ORDERING PARTS

For ordering parts contact either your dealer or Norm Engineering directly. Contact details are included at the front of this manual. To assist, note the details of your 6ft Apache Slasher Mulcher in the spaces provided under *Section 9.1.1 Reference Information*.

9.1.1 REFERENCE INFORMATION

Always refer to the model and serial number when ordering parts or requesting from you dealer. The serial number for this product is located on the identification place of your 6ft Apache Slasher Mulcher.

Model Number:
……

Make:
……

Serial Number:
……

Date Purchased:
……

Copyright © Norm Engineering

10 PARTS LIST

When ordering replacement parts, please include the following information:

- The machine makes and models.
- The serial number on the attachment
- The item number, as indicated by the following figures and tables.
- Parts with a part number of "\" indicate a component that varies dependent on machine make and model. A serial number and item number is essential if ordering these parts.

The product images are for illustrative purposes only and may not be an exact representation of the product. Norm Engineering reserves the right to change product images and specifications at any time without notice.

Copyright © Norm Engineering

NAS1830EF - NAS1830HF - NAS1830LF | 6FT APACHE SLASHER PARTS LIST

ITEM	QTY	DESCRIPTION	NORM NO.	DIAGRAM
1	1	6FT APACHE MAIN WELDMENT	NAS6000	1
2	2	6FT APACHE SKID WELDMENT	NAS6001	1
3	1	6FT APACHE DRIVE SYSTEM	\	1
4	1	UNIVERSAL PICKUP ASSEMBLY	\	1
5	26	FRONT CHAIN - 32 LINKS	NAS6037	1
6	23	REAR CHAIN - 14 LINKS	NAS6036	1
7	1	6FT APACHE GEARBOX COVER	NAS6034	1
8	2	APACHE COLOUR PLATE	NAS6020	1
9	1	NORM ENG COLOUR PLATE	NAS6035	1
10	1	INSPECTION PORT COVER	NAS6030	1
11	9	CHAIN RETENTION BRACKET	NSL5064	1
12	1	DOCUMENT HOLDER	NN001	1
13	3	PICKUP RETAINING SPIGOT	NSL5059	1
14	2	PICKUP STOP	NSL5061	1
15	1	REAR CHAIN RETENTION BAR	NAS6031	1
16	2	SIDE CHAIN RETENTION BAR	NAS6032	1
17	1	FRONT CHAIN RETENTION BAR	NAS6033	1
18	33	NYLOCK NUT [M6x1]	-	1
19	4	HEX BOLT || 3/8"x0.875"	-	1
20	22	HEX BOLT|| M6x20	-	1
21	11	HEX BOLT || M6x25	-	1
22	1	HEX BOLT || M12x40	-	1
23	8	HEX BOLT || M16x40	-	1
24	4	HEX BOLT || M16x50	-	1
25	3	COUNTERSUNK BOLT || M12x40	-	1
26	4	PLAIN WASHER || 3/8"	-	1
27	66	PLAIN WASHER || M6	-	1
28	1	PLAIN WASHER || M12	-	1
29	12	PLAIN WASHER || M16	-	1

Copyright © Norm Engineering

Diagram 1

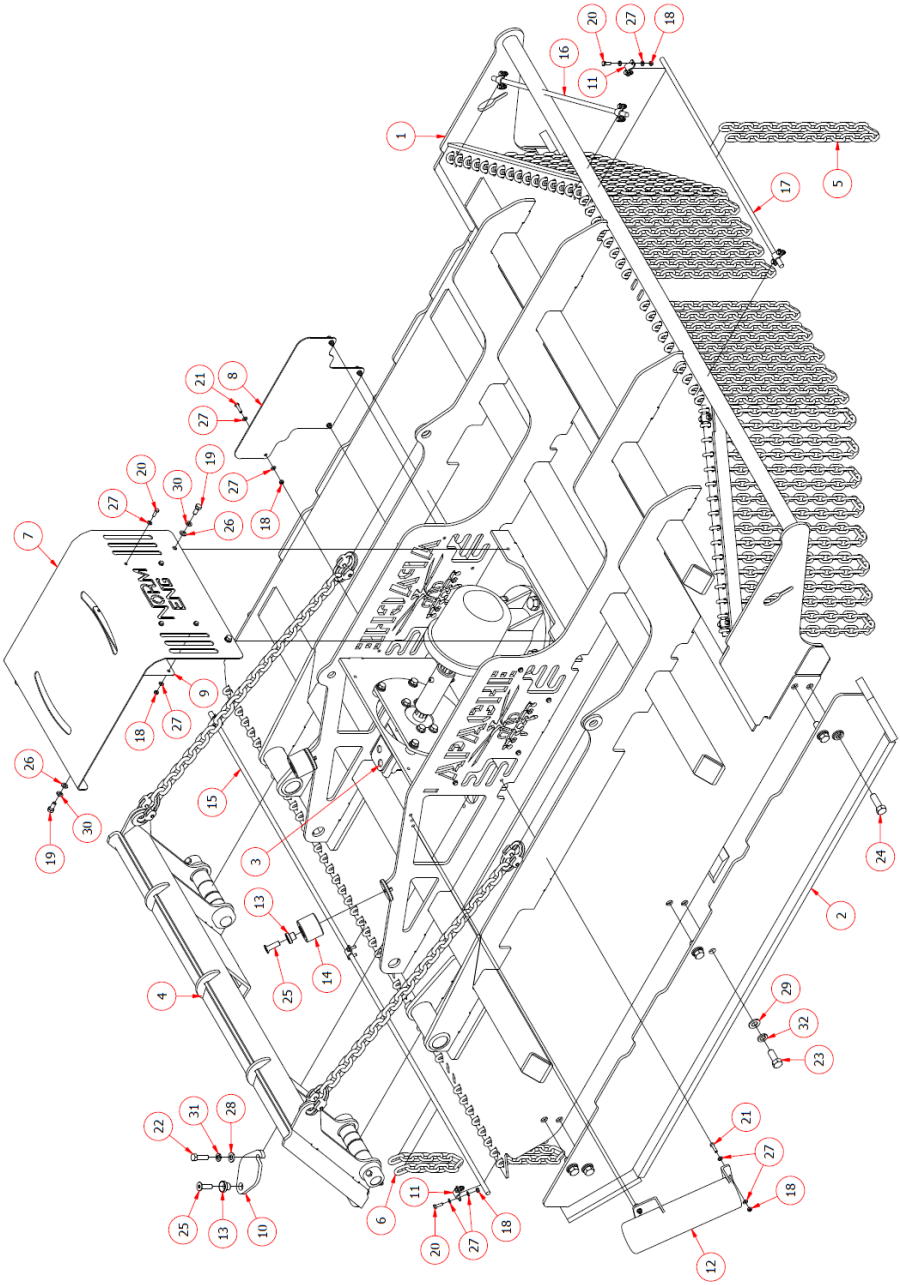

Copyright © Norm Engineering

NAS6004EF | 6FT APACHE CUTTING SYSTEM EXTREME FLOW PARTS LIST

ITEM	QTY	DESCRIPTION	NORM NO.	DIAGRAM
1	1	MOTOR MOUNT WELDMENT	NSL5200	2
2	1	6FT APACHE SAW BLADE	NAS6002	2
3	1	6FT APACHE BLADE HUB	NAS6003	2
4	1	HYDRAULIC MOTOR	NN018	2
5	1	GEARBOX	NN022	2
6	1	SPLINED SLEEVE	NN002	2
7	10	MULCHING TOOTH	NSL5158	2
8	4	SLASHER BLADE	NN003	2
9	10	TOOTH SPACER WASHER	NAS6041	2
10	4	BOLT T/S BLADE	NN004	2
11	4	WASHER T/S BLADE	NN005	2
12	4	NUT T/S BLADE	NN006	2
13	8	NYLOCK NUT [3/4-10 UNC]	-	2
14	1	NYLOCK NUT [M8x1.25]	-	2
15	4	NYLOCK NUT [M12x1.75]	-	2
16	4	NYLOCK NUT [M20x1.5]	-	2
17	1	CASTELLATED NUT	NN024	2
18	10	HEX BOLT || 1/2"x1.75"	-	2
19	8	HEX BOLT || 3/4"x2.5	-	2
20	5	HEX BOLT || M12x45	-	2
21	4	HEX BOLT || M12x55	-	2
22	4	HEX BOLT || M20x65	-	2
23	10	SOCKET BOLT || M8x70	-	2
24	16	PLAIN WASHER || 3/4"	-	2
25	1	PLAIN WASHER || M8	-	2
26	13	PLAIN WASHER || M12	-	2
27	8	PLAIN WASHER || M20	-	2
28	5	SPRING LOCK WASHER || M12	-	2

Copyright © Norm Engineering

NAS6004HF | 6FT APACHE CUTTING SYSTEM HIGH FLOW PARTS LIST

ITEM	QTY	DESCRIPTION	NORM NO.	DIAGRAM
1	1	MOTOR MOUNT WELDMENT	NSL5200	2
2	1	6FT APACHE SAW BLADE	NAS6002	2
3	1	6FT APACHE BLADE HUB	NAS6003	2
4	1	HYDRAULIC MOTOR	NN017	2
5	1	GEARBOX	NN022	2
6	1	SPLINED SLEEVE	NN002	2
7	10	MULCHING TOOTH	NSL5158	2
8	4	SLASHER BLADE	NN003	2
9	10	TOOTH SPACER WASHER	NAS6041	2
10	4	BOLT T/S BLADE	NN004	2
11	4	WASHER T/S BLADE	NN005	2
12	4	NUT T/S BLADE	NN006	2
13	8	NYLOCK NUT [3/4-10 UNC]	-	2
14	1	NYLOCK NUT [M8x1.25]	-	2
15	4	NYLOCK NUT [M12x1.75]	-	2
16	4	NYLOCK NUT [M20x1.5]	-	2
17	1	CASTELLATED NUT	NN024	2
18	10	HEX BOLT || 1/2"x1.75"	-	2
19	8	HEX BOLT || 3/4"x2.5	-	2
20	5	HEX BOLT || M12x45	-	2
21	4	HEX BOLT || M12x55	-	2
22	4	HEX BOLT || M20x65	-	2
23	10	SOCKET BOLT || M8x70	-	2
24	16	PLAIN WASHER || 3/4"	-	2
25	1	PLAIN WASHER || M8	-	2
26	13	PLAIN WASHER || M12	-	2
27	8	PLAIN WASHER || M20	-	2
28	5	SPRING LOCK WASHER || M12	-	2

Copyright © Norm Engineering

NAS6004LF | 6FT APACHE CUTTING SYSTEM LOW FLOW PARTS LIST

ITEM	QTY	DESCRIPTION	NORM NO.	DIAGRAM
1	1	MOTOR MOUNT WELDMENT	NSL5123	2
2	1	6FT APACHE SAW BLADE	NAS6002	2
3	1	6FT APACHE BLADE HUB	NAS6003	2
4	1	HYDRAULIC MOTOR	NN016	2
5	1	GEARBOX	NN022	2
6	1	SPLINED SLEEVE	NN002	2
7	10	MULCHING TOOTH	NSL5158	2
8	4	SLASHER BLADE	NN003	2
9	10	TOOTH SPACER WASHER	NAS6041	2
10	4	BOLT T/S BLADE	NN004	2
11	4	WASHER T/S BLADE	NN005	2
12	4	NUT T/S BLADE	NN006	2
13	8	NYLOCK NUT [3/4-10 UNC]	-	2
14	1	NYLOCK NUT [M8x1.25]	-	2
15	4	NYLOCK NUT [M12x1.75]	-	2
16	4	NYLOCK NUT [M20x1.5]	-	2
17	1	CASTELLATED NUT	NN024	2
18	10	HEX BOLT || 1/2"x1.75"	-	2
19	8	HEX BOLT || 3/4"x2.5	-	2
20	5	HEX BOLT || M12x45	-	2
21	4	HEX BOLT || M12x55	-	2
22	4	HEX BOLT || M20x65	-	2
23	10	SOCKET BOLT || M8x70	-	2
24	16	PLAIN WASHER || 3/4"	-	2
25	1	PLAIN WASHER || M8	-	2
26	13	PLAIN WASHER || M12	-	2
27	8	PLAIN WASHER || M20	-	2
28	5	SPRING LOCK WASHER || M12	-	2

Copyright © Norm Engineering

Diagram 2

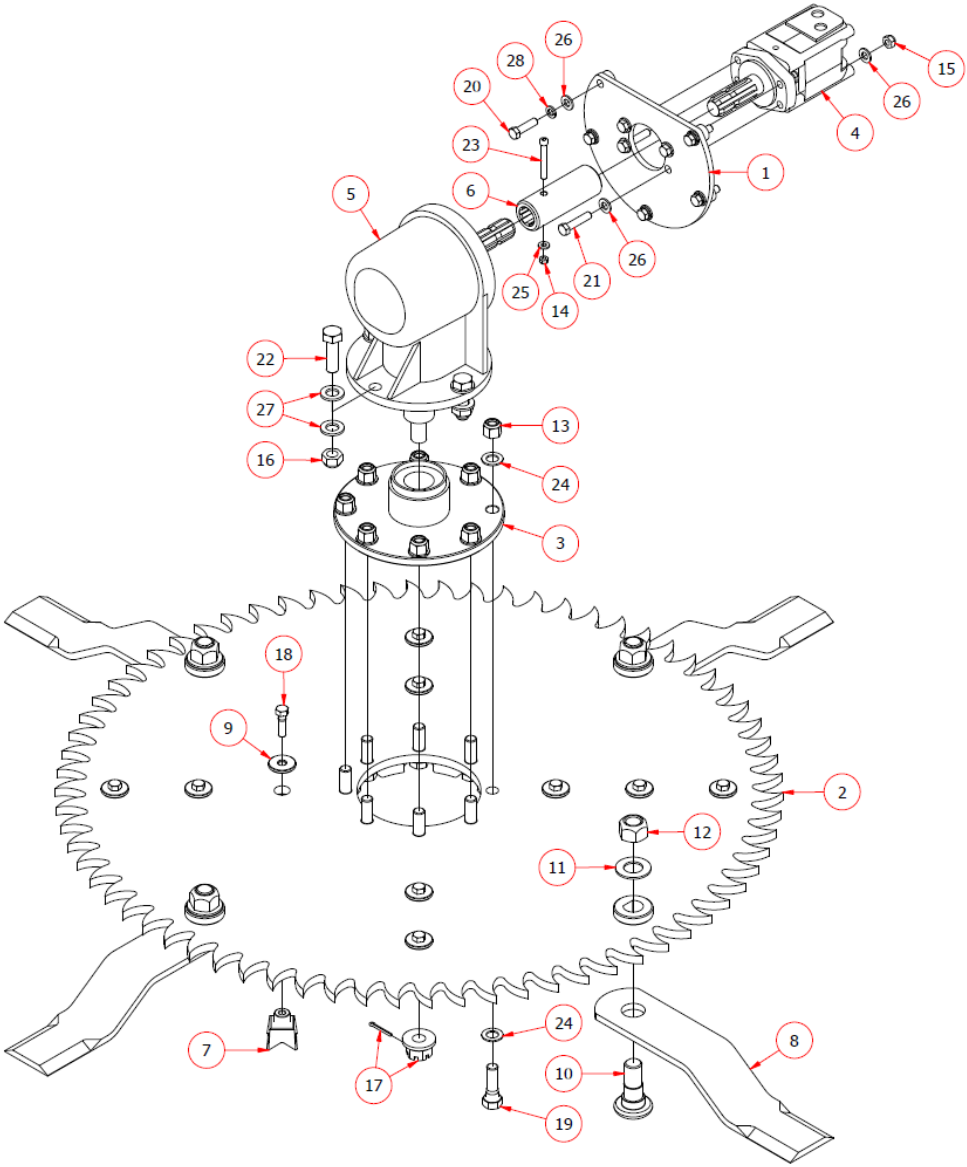

Copyright © Norm Engineering

NAS6033 | 6FT APACHE UNIVERSAL PICKUP ASSEMBLY PARTS LIST

ITEM	QTY	DESCRIPTION	NORM NO.	DIAGRAM
1	1	UNIVERSAL PICKUP	NSL5006	3
2	2	NYLON INSERT	BU040	3
3	2	NYLON INSERT CUT	BU148	3
4	2	PIN	PI143	3
5	2	29 LINK UNIVERSAL PLATE CONNECTOR	NSL6029	3
6	2	NYLOCK NUT [3/8-16 UNC]	-	3
7	2	HEX BOLT || 3/8"x2.75"	-	3
8	2	PLAIN WASHER || 3/8"	-	3

Diagram 3

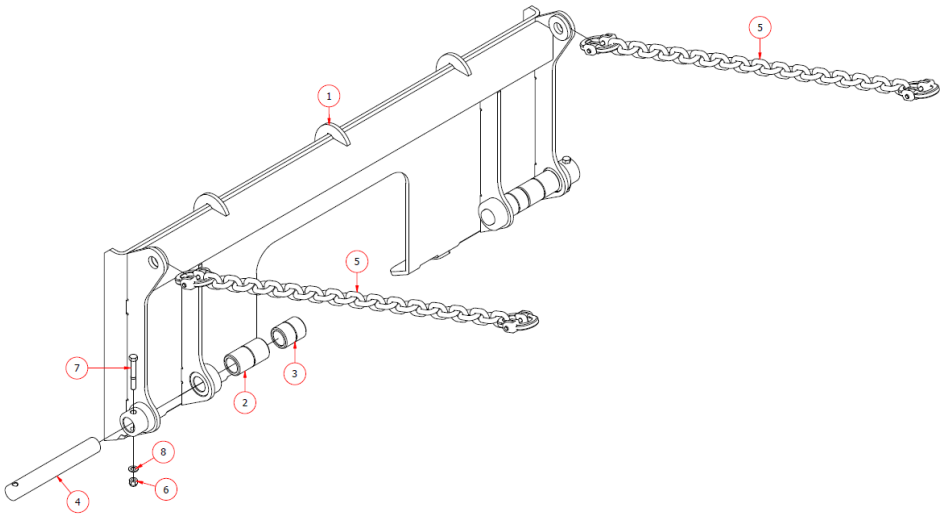

Copyright © Norm Engineering

NAS6031 | 6FT APACHE UNIVERSAL PICKUP W/ DROPLINKS PARTS LIST

ITEM	QTY	DESCRIPTION	NORM NO.	DIAGRAM
1	1	UNIVERSAL PICKUP	NSL5006	4
2	1	R.H. LOWERING FRAME MOUNT	NSL5008	4
3	1	L.H. LOWERING FRAME MOUNT	NSL5007	4
4	4	NYLON INSERT	BU040	4
5	4	NYLON INSERT CUT	BU148	4
6	4	PIN	PI143	4
7	2	38 LINK UNIVERSAL PLATE CONNECTOR	NSL6030	4
8	4	NYLOCK NUT [3/8-16 UNC]	-	4
9	4	HEX BOLT || 3/8"x2.75"	-	4
10	4	PLAIN WASHER || 3/8"	-	4

Diagram 4

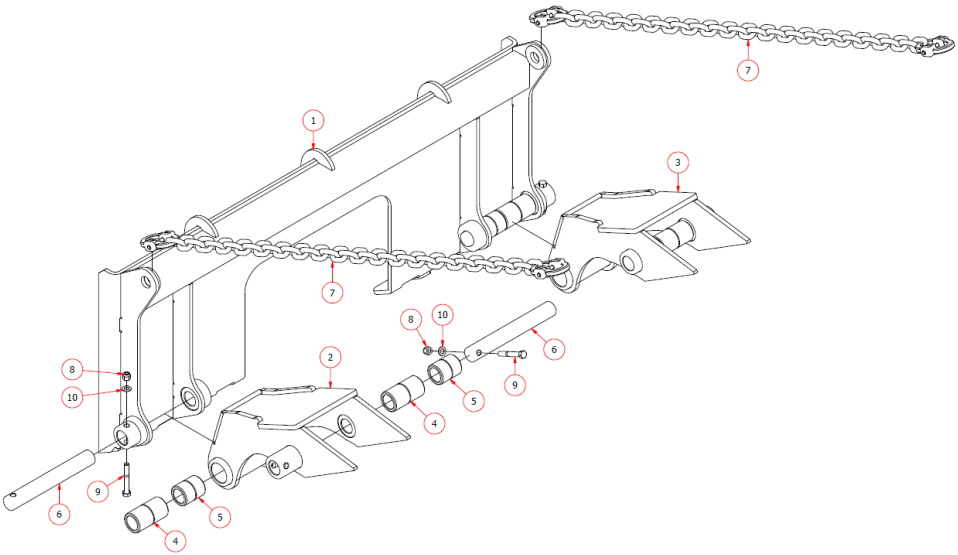

Copyright © Norm Engineering

NAS1830HF-A05 | 6FT APACHE CUTTING SYS. HIGH FLOW HOSES PARTS LIST

ITEM	QTY	DESCRIPTION	NORM NO.	DIAGRAM
1	1	HYDRAULIC MOTOR	/	5
2	1	MALE COUPLER	/	5
3	1	FEMALE COUPLER	/	5
4	1	CASE DRAIN COUPLER	NN008	5
5	1	HYDRAULIC CHECK VALVE	NN013	5
6	1	CASE DRAIN STRAIGHT ADAPTOR	JM-UM-0907	5
7	2	MOTOR STRAIGHT ADAPTOR	JM-UM-1414	5
8	1	BULKHEAD STRAIGHT ADAPTOR	JM-JB-0909	5
9	1	CASE DRAIN STRAIGHT ADAPTOR	BM-JM-0809	5
10	2	MOTOR STRAIGHT ADAPTOR	/	5
11	2	BULKHEAD T-ADAPTOR	JM-JB-JM-141414	5
12	2	CHECK VALVE STRAIGHT ADAPTOR	BM-JF-0814	5
13	1	TOP MACHINE TO CHECK CALVE HOSE	NAS1830HF-HH01	5
14	2	TOP CHECK VALVE TO MOTOR HOSE	NAS1830HF-HH02	5
15	3	BTM MACHINE TO CHECK CALVE HOSE	NAS1830HF-HH03	5
16	2	BTM CHECK VALVE TO MOTOR HOSE	NAS1830HF-HH04	5
17	5	DRAIN MACHINE TO ADAPTOR HOSE	NAS1830HF-HH05	5
18	1	DRAIN ADAPTOR TO MOTOR HOSE	NAS1830HF-HH06	5
19	1	HOSE SOCK COVER	NAS1830HF-HH07	5

Copyright © Norm Engineering

NAS1830LF-A05 | 6FT APACHE CUTTING SYS. LOW FLOW HOSES PARTS LIST

ITEM	QTY	DESCRIPTION	NORM NO.	DIAGRAM
1	1	HYDRAULIC MOTOR	NN016	5
2	1	MALE COUPLER	NN009	5
3	1	FEMALE COUPLER	NN010	5
4	1	CASE DRAIN COUPLER	NN007	5
5	1	HYDRAULIC CHECK VALVE	NN008	5
6	1	CASE DRAIN STRAIGHT ADAPTOR	JM-UM-0907	5
7	2	MOTOR STRAIGHT ADAPTOR	JM-UM-1414	5
8	1	BULKHEAD STRAIGHT ADAPTOR	JM-JB-0909	5
9	1	CASE DRAIN STRAIGHT ADAPTOR	BM-JM-0809	5
10	2	MOTOR STRAIGHT ADAPTOR	BM-JM-0814	5
11	2	BULKHEAD T-ADAPTOR	JM-JB-JM-141414	5
12	2	CHECK VALVE STRAIGHT ADAPTOR	BM-JF-0814	5
13	1	TOP MACHINE TO CHECK CALVE HOSE	NAS1830HF-HH01	5
14	2	TOP CHECK VALVE TO MOTOR HOSE	NAS1830HF-HH02	5
15	3	BTM MACHINE TO CHECK CALVE HOSE	NAS1830HF-HH03	5
16	2	BTM CHECK VALVE TO MOTOR HOSE	NAS1830HF-HH04	5
17	5	DRAIN MACHINE TO ADAPTOR HOSE	NAS1830HF-HH05	5
18	1	DRAIN ADAPTOR TO MOTOR HOSE	NAS1830HF-HH06	5
19	1	HOSE SOCK COVER	NAS1830HF-HH07	5

Copyright © Norm Engineering

Diagram 5

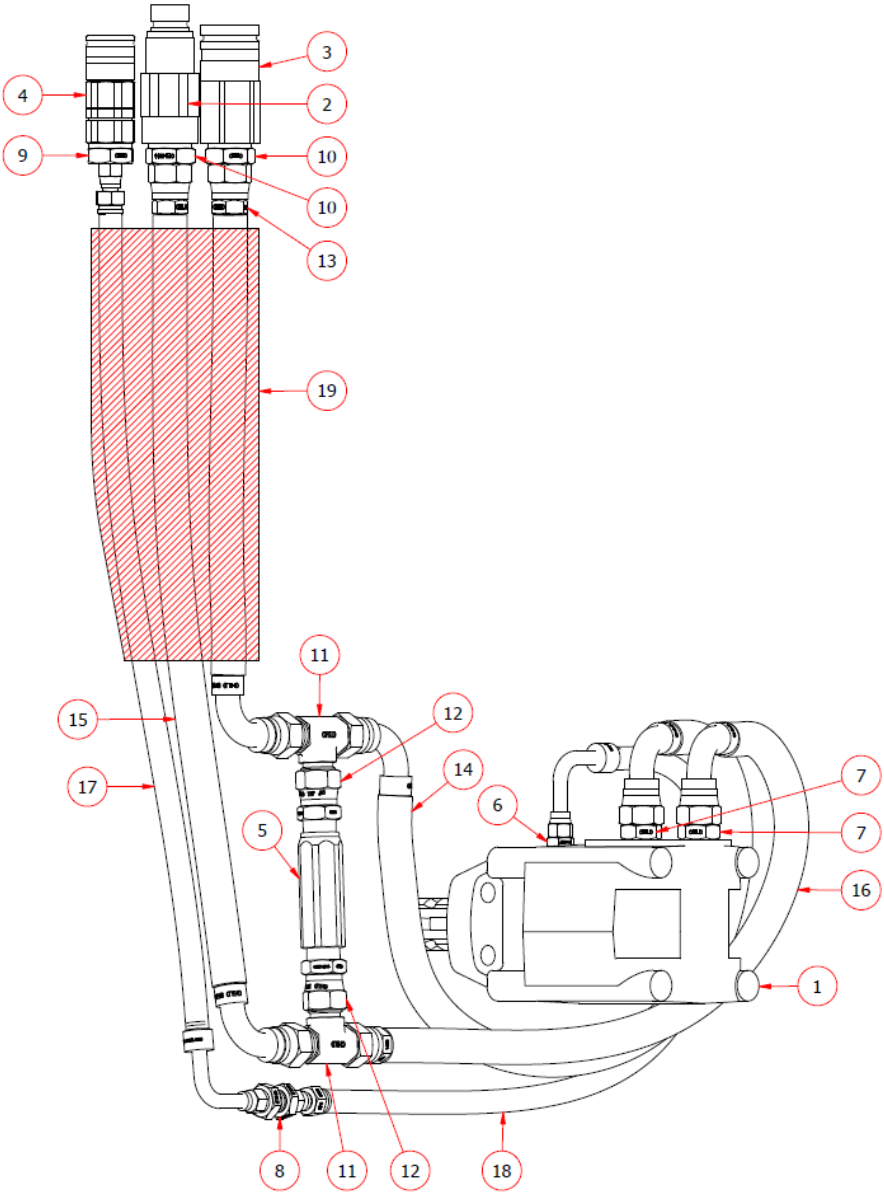

Copyright © Norm Engineering

11 APPENDICES

11.1SAFETY SIGN LOCATIONS

Item	Description
1	Warning | Pinch point
2	Danger | High pressure fluid
3	Danger | Read the Manual

ITEM 1

ITEM 2

ITEM 3

Instructions

- Keep all safety signs clear and legible.
- Replace all missing, illegible, or damaged safety signs.
- When replacing parts which have safety signs attached make sure the replacement part has the safety sign.

Copyright © Norm Engineering

12 WARRANTY

12.1 DEFINITION

“Dealer” means a dealer that purchases products directly from Norm Engineering Pty Ltd.

“End consumer” means a consumer that purchases products either directly from Norm Engineering Pty Ltd or directly from a “dealer” as defined above.

“Products” includes goods and services.

12.2 WARRANTY

Norm Engineering Pty Ltd welcomes you as a purchaser of its products. All Norm Engineering products are designed to ensure the highest standards, reliability, and performance.

Norm Engineering Pty Ltd warrants hydraulic cylinders against defects in manufacture for a period of twelve months from date of sale by the dealer or Norm Engineering Pty Ltd to the end consumer. The warranty in relation to hydraulic cylinders ceases upon the occurrence of damage to the piston rod of the hydraulic cylinder.

No warranty applies to hoses, tubes, and fittings in relation to any of the products.

Norm Engineering Pty Ltd warrants all its other products against defects in manufacture for a period of twelve months from the date of sale by the dealer or Norm Engineering Pty Ltd to the end consumer.

Norm Engineering Pty Ltd will, subject to the terms of this warranty, in relation to defective goods:

a) replace the defective goods at no cost to the end consumer; or

b) repair the defective goods at no cost to the end consumer; or

c) pay the cost of having the defective goods repaired.

Copyright © Norm Engineering

Norm Engineering Pty Ltd will, subject to the terms of this warranty, in relation to defective services:

a) supply the services again to the end consumer at no cost to the end consumer; or

b) pay the cost of having the service supplied again to the end consumer.

Warranty claims may be sent either to Norm Engineering Pty Ltd., P.O. Box 178, Mt Ommaney, Qld. 4074 or to the dealer.

All warranty periods shall commence from the date of sale by Norm Engineering Pty Ltd or the dealer to the end consumer. It is the end consumer's responsibility to establish the date of sale of the product to the end consumer by the dealer.

The end consumer may establish the date of sale by producing to Norm Engineering Pty Ltd the dated contract of sale between the end consumer and the dealer with its warranty claim.

If the end consumer is not able to establish the date of sale of the product to the end consumer by the date of its warranty claim, the warranty period shall be deemed to commence from the date of sale of the product by Norm Engineering Pty Ltd to the dealer.

This warranty will not apply if the end consumer does not use the product in accordance with Norm Engineering Pty Ltd's recommendation.

This warranty will not apply if the end consumer does not use products applied or fitted to any machine, equipment, or plant, in accordance with Norm Engineering Pty Ltd's operating recommendation for the product.

This warranty does not apply to any loss or damage caused through consequential neglect. Unless the end consumer indicates to Norm Engineering Pty Ltd prior to purchasing the product that it intends to use the product for a particular purpose, there is no implied warranty that the product will fit for that particular purpose. Ask Norm Engineering for clarification of the intended use is not included in the manual.

Copyright © Norm Engineering

Only a dealer authorised in writing, or issued with an order number, by Norm Engineering Pty Ltd may carry out warranty repairs. Prior written approval must be obtained from Norm Engineering Pty Ltd before warranty repairs are carried out. Norm Engineering Pty Ltd will not recognise any warranty claim for reimbursement of repair costs unless the repairs have been carried out by an authorised dealer with prior written approval from Norm Engineering Pty Ltd to carry out the repairs.

Norm Engineering Pty Ltd limits its liability, as follows:

1) Pursuant to Section 68A of the Trade Practices Act 1974, this clause applies in respect of any of the goods or services supplied under this contract which are not of a kind ordinarily acquired for personal, domestic, or household use or consumption, provided that this clause will not apply if the end consumer establishes that reliance on it would not be fair and reasonable.

2) Liability for breach of a condition or warranty implied into this contract by the Trade Practices Act 1974 other than a condition implied by Section 69 is limited:

a) In the case of goods, to any one of the following as determined by Norm Engineering Pty Ltd:

i. the replacement of goods

ii. the repair of the goods

iii. the payment of the cost of having the goods repaired, excluding travelling and freight charges.

b) In the case of services, to any one of the following as determined by Norm Engineering Pty Ltd.

i. the supplying of the services again; or

ii. the payment of the cost of having the services supplied again.

Expenses incurred by the end consumer in connection with making a warranty claim shall be borne by the end consumer unless otherwise agreed by Norm Engineering Pty Ltd.

Copyright © Norm Engineering

To the extent permitted by law, all implied conditions, and warranties in the contract of sale between Norm Engineering Pty Ltd and the end consumer are hereby excluded.

The benefits conferred by this warranty on the end consumer are in addition to all other legal rights and remedies that the end consumer has in respect of the products.

Contracts of sale for products, and this warranty are submitted to the exclusive jurisdiction of the courts of Queensland.

Copyright © Norm Engineering

Notes:

Copyright © Norm Engineering