MANUFACTURER OF EARTHMOVING ATTACHMENTS | VERSION: 1.0C

EARTH DRILL

OPERATION AND MAINTENANCE MANUAL

NORM ENGINEERING

BRISBANE
PH: 07 3376 3177
SALES@NORMENG.COM.AU
787 BOUNDARY ROAD
DARRA QLD 4076

MELBOURNE
PH: 03 9775 1965
VICSALES@NORMENG.COM.AU
2/45 FRANKSTON GARDENS DRIVE
CARRUM DOWNS VIC 3201

SYDNEY
PH: 02 7246 7838
NSWSALES@NORMENG.COM.AU
2/3 CONTAPLAS STREET
ARNDELL PARK NSW 2148

NEW ZEALAND
PH: +64 7 889 7080
SERVICE@NORMENG.CO.NZ
14/2582 STATE HIGHWAY 26
MORRINSVILLE 3372

INDEX

FOREWORD 4
Enquiries 4
Operating Limits 4
REGISTRATION 6
INTRODUCTION 9
SAFETY NOTES 10
Protect Yourself 10
You May Need 10
Know Your Equipment 10
Danger, Warning And Caution 10
Protective And Safety Devices 11
Check The Equipment 11
Hazard Classification (Only applicable to ANSI Safety Labels) 11
Safety Precautions 12
IDENTIFICATION 13
Typical Setup 13
Rope Wind Hitch Parts 14
MOUNTING - HITCH FITTING 15
Single Pin Hitch 15
Double Pin Hitch 16
Cradle Hitch 17
Skid Steer Loader & Telehandler 18
MOUNTING - TRUCK CRANE 19
Linkage Block 19
Rope Wind Hitch 20
Attach Rope Wind Hitch 21
MOUNTING - 150XHT / 250XHT 22
Mounting Unit from Cradle 23
HYDRAULIC CONNECTIONS 24
Rope Wind Hitch 25
Attach Hydraulic Hoses - Earth Drill 25
Attach Hoses - Earth Drill Stop Valve 25
Maximum Permissible Back Pressures 26
Case drain line fitting 26
Hoses Specifications 27

AIR SYSTEM CONNECTION 28
Rope Wind - Auger Hook Control 28
Auger Hook Air Control - Fitting 29
RUNNING-IN 30
FITTING THE AUGER 31
PREPARATION 32
WORKING PROCEDURE 33
DRILLING WITH FIXED EXTENSIONS 36
REMOVING A FIXED EXTENSION 37
Removing PA Fixed Extensions 38
Multiple Fixed Extensions 38
DRILLING WITH TELESCOPIC EXTENSIONS 39
Fitting A Telescopic Extension 39
ADJUSTING A TELESCOPIC EXTENSION 40
ADJUSTING A PA TELESCOPIC EXTENSION 41
TRANSPORTATION 42
Transportation On Public Highways 42
Transportation Within The Job Site 42
150XHT / 250XHT 42
Rope Wind Earth Drill 43
ROPE WIND EARTH DRILL STOWING 44
ROPE WIND AUGER DEPLOYMENT 46
MAINTENANCE & LUBRICATION 48
Daily Check For Larger Units 49
Service Intervals 50
Recommended Oil Change Intervals 51
Oil Change Procedure 52
Recommended Lubricants 53
Component Wear 54
Auger Tooth Replacement 55
Shock Lock Teeth 55
TROUBLESHOOTING 56
SERVICE RECORD 59
WARRANTY STATEMENT 65

FOREWORD

Enquiries

Please state the model type and serial number when making enquiries or orders and all written correspondence. The serial number is recorded on a plate located on the top of the drive unit.

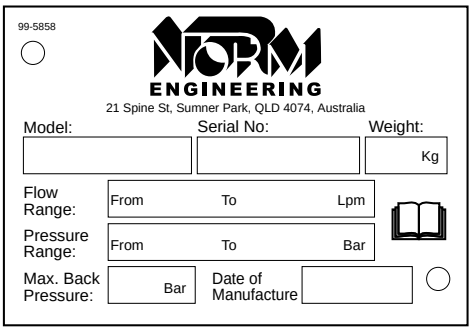

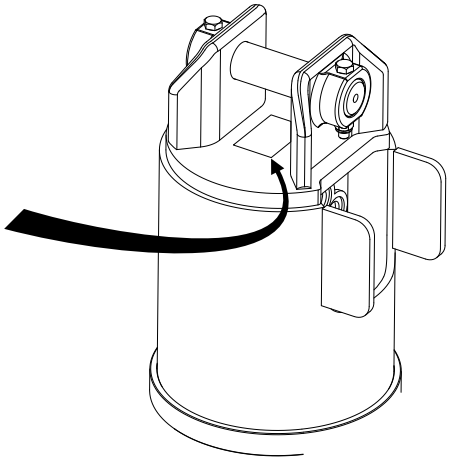

Operating Limits

This equipment must be operated within the parameters stated on the serial plate. Failure to do so may cause damage to the equipment and invalidate the warranty. If in doubt, contact your nearest Norm Engineering dealer.

BLANK PAGE

REGISTRATION

Complete this form and keep it with the manual

Norm Engineering (QLD)
787 Boundary Rd,
Darra,
Brisbane, QLD 4076,
Australia.
Ph: +61 (07) 3376 3177
Email: Reception@normeng.com.au

MODEL NUMBER:

SERIAL NUMBER:

DATE OF MANUFACTURE:

SUPPLIER / DEALER:

DATE SOLD TO SUPPLIER / DEALER:

DATE SOLD TO ORIGINAL END USER:

OWNER OR OPERATOR:

PARENT MACHINE MAKE & MODEL:

Note; Always quote the serial number in any communication with your supplier / dealer

REGISTRATION

For warranty purposes this form **MUST** be completed and returned to Norm Engineering within 14 days of purchase by the end user.

Norm Engineering (QLD)
787 Boundary Rd,
Darra,
Brisbane, QLD 4076,
Australia.
Ph: +61 (07) 3376 3177
Email: Reception@normeng.com.au

MODEL NUMBER:

SERIAL NUMBER:

DATE OF MANUFACTURE:

SUPPLIER / DEALER:

DATE SOLD TO SUPPLIER / DEALER:

DATE SOLD TO ORIGINAL END USER:

OWNER OR OPERATOR:

PARENT MACHINE MAKE & MODEL:

Note; Always quote the serial number in any communication with your supplier / dealer

For warranty purposes the form on the reverse of this page should be completed and returned to the appropriate address.

Norm Engineering (QLD)
787 Boundary Rd,
Darra,
Brisbane, QLD 4076,
Australia.
Ph: +61 (07) 3376 3177
Email: Reception@normeng.com.au

Alternatively, if your machine has a pre-installation checks label, like this;-

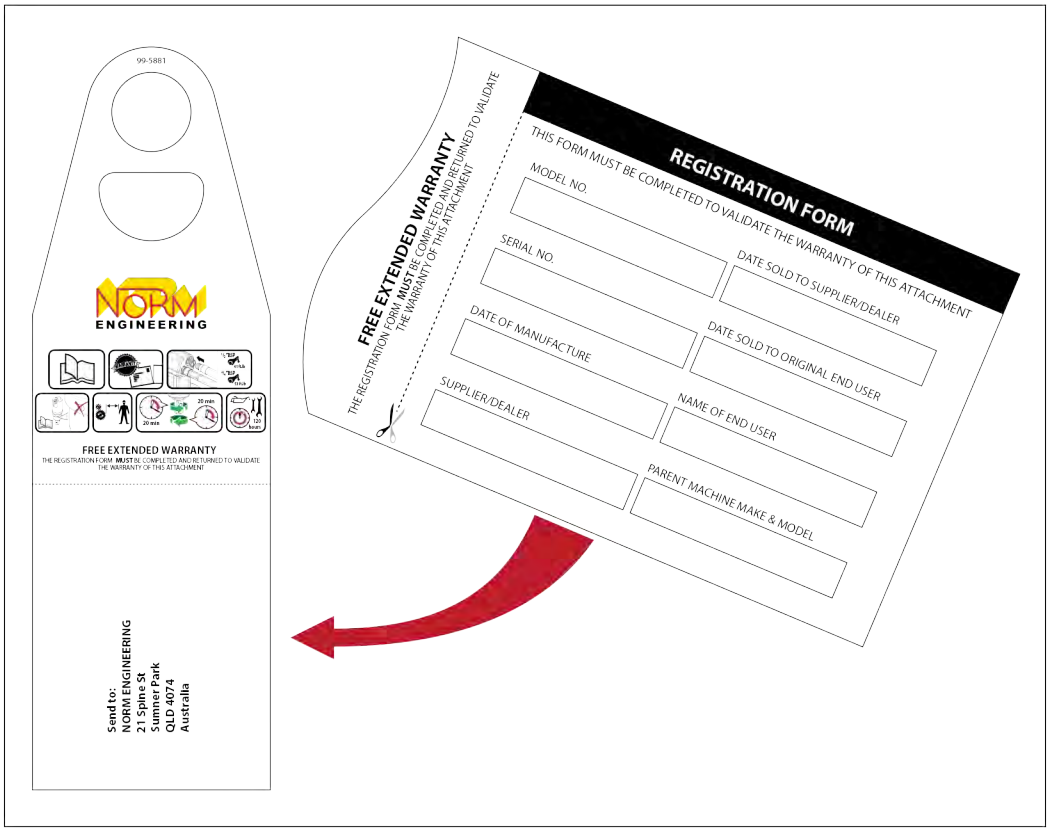

Just fill in the details on the back and post it to us,
the address is printed on the front.

INTRODUCTION

Norm Engineering thank you for purchasing your new product. This operating manual has been prepared to enable you to operate the equipment in a safe manner.

Norm Engineering Earth Drill Units have been designed for use with specific Norm Engineering mounting frames, Augers, Auger extensions and Auger wear parts. Provided these are used and maintained correctly, they will provide a safe and reliable method of boring holes in the earth.

For information on lubrication and maintenance intervals, see pages 48 to 55
Before operating the Earth Drill, please note:

Your Earth Drill comes complete, filled with the correct amount of oil. There is no need to check the oil level.

Hydraulic hoses must be fitted and tightened to the correct torque (see page 24).

If a case drain hose is fitted to your unit, it must be connected correctly (See page 26).

The unit must be run in following the recommended procedure (see page 30).

NOTE:

This operating manual should be used in conjunction with the parent machine's operating instructions.

Instruction books should be regarded as part of the machine. They should always be kept safe with the machine for easy and quick reference.

New or extra copies can be obtained from your Norm Engineering dealer or direct from Norm Engineering.

Norm Engineering Earth Drill Units have been designed for use with specific parent machines along with the Norm Engineering range of mounting frames, Augers, Auger extensions and Auger wear parts. Provided these are used and maintained correctly, they will provide a safe and reliable method of boring holes in the earth.

Norm Engineering continually strives to improve and increase its range of products and therefore reserves the right to alter its specifications at any time without notice or obligation. The company accepts no responsibility for discrepancies which may occur between specifications of its machines and descriptions thereof contained in its publications.

SAFETY NOTES

Protect Yourself

Make sure you wear protective clothing and personal safety items.

You May Need

- A Hard Hat
- Safety Goggles
- Hearing Protection
- Foul Weather Clothing
- Reflective Clothing
- Protective Gloves
- Safety Boots

DO NOT wear items of loose clothing, jewellery or other items and tie up any long hair which could entangle in the controls or other parts of the machine.

Know Your Equipment

Get to know all you how to operate all controls on the machine and the attachments

IF THERE IS SOMETHING IN THE MANUAL WHICH YOU DO NOT UNDERSTAND, CONTACT THE MACHINE AGENT OR MANUFACTURER AND ASK THEM TO EXPLAIN IT TO YOU.

Danger, Warning And Caution

This symbol below has 3 important meanings when used with the following captions.

DANGER: An IMMINENTLY HAZARDOUS situation that WILL result in DEATH or VERY SERIOUS INJURY

WARNING: A POTENTIALLY HAZARDOUS situation that COULD result in DEATH or VERY SERIOUS INJURY

CAUTION: A POTENTIALLY HAZARDOUS situation that MAY result in MINOR INJURY

Protective And Safety Devices

Keep all protective devices in place and securely fastened. Make sure all guards, sheilds and safety signs are properly installed and are in good condition.

Check The Equipment

Before you operate the equipment, take time to check your machine and ensure that all systems are in good operational order.

- Never operate the equipment with worn, damaged or missing parts. Use only genuine replacement parts.
- Always ensure that the parent machine is secure and stable with its engine switched off and hydraulic pipes disconnected before carrying out any maintenance work.
- Check for loose, broken, missing or damaged parts. Have everything put into good repair and make sure all safety devices are in place.
- Perform all maintenance procedures outlined for the equipment.
- Always protect hands. Select appropriate gloves when handling the equipment during fitting, removing or adjusting
- Always protect feet with safety boots.

WARNING: Hydraulic fluid under pressure can penetrate the skin or eyes and cause serious PERSONAL INJURY, BLINDNESS OR DEATH.
Fluid leaks under pressure may not be visible. Use a piece of wood or thick cardboard to find leaks. DO NOT USE YOUR BARE HANDS.
Wear safety goggles for eye protection.
If any fluid is injected into the skin, it MUST be surgically removed.
SEE A DOCTOR IMMEDIATELY

Make sure all hydraulic lines are correctly installed

Before applying pressure to the hydraulic system be sure all connections are tight and that lines, pipes and hoses are not damaged. Before disconnecting hydraulic lines, be sure to relieve all pressure.

Hazard Classification (Only applicable to ANSI Safety Labels)

DANGER

DANGER: IMMEDIATE HAZARD! - Failure to understand or obey this information is likely to result in personal injury or death.

WARNING

WARNING: Failure to follow these instructions may result in personal injury or death.

CAUTION

CAUTION: Failure to follow these instructions may result in minor personal injury or damage to the machine or the vehicle.

NOTICE

NOTICE: This is important information for the proper use of this equipment. Failure to comply may lead to premature equipment failure.

CLEAN OR REPLACE THE SAFETY LABELS IF THEY CANNOT BE CLEARLY READ OR UNDERSTOOD

Safety Precautions

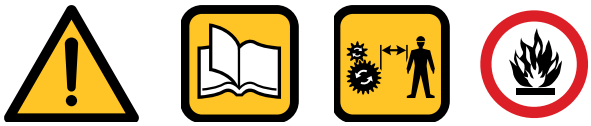

NEVER operate or assemble the equipment without **fully** understanding the operating instructions of both the equipment unit and the parent machine.

Norm Engineering recommend you receive dealer instruction before operating the unit.

NEVER operate the equipment unless you are in good physical condition and mental health.

NEVER operate the equipment under the influence of any substance (including drugs & alcohol) which might impair vision.

NEVER operate the equipment with worn, damaged or missing parts. Use only genuine replacement parts.

NEVER proceed with works before completing a site risks assessment immediately before commencing work. Nominating the safe work exclusion zone radius for persons and animals as part of identifying risks and implementing controls.

NEVER allow minors to operate the equipment.

ALWAYS survey the work area before commencing operations. Check for potential hazards, eg. Electricity or communication cables etc.

ALWAYS ensure that the parent machine is secure and stable with it's engine switched off before carrying out any maintenance work.

ALWAYS ensure the hydraulic oil supply to the attachment is disconnected by uncoupling the hydraulic hose connectors before fitting, removing or adjusting the equipment

ALWAYS wear head protection and eye protection when working on the unit.

ALWAYS protect hands. Select appropriate when handling the equipment

during fitting, removing or adjusting the unit.

ALWAYS protect feet. Wear approved safety boots.

ALWAYS follow the parent machine instructions regarding noise protection.

STAY ALERT. Should something break, come loose or fail to operate on your equipment, STOP WORK, lower equipment to the ground, shut off the engine and lock out hydraulic supply, inspect the machine and have repairs or adjustments made before resuming operation.

IDENTIFICATION

Typical Setup

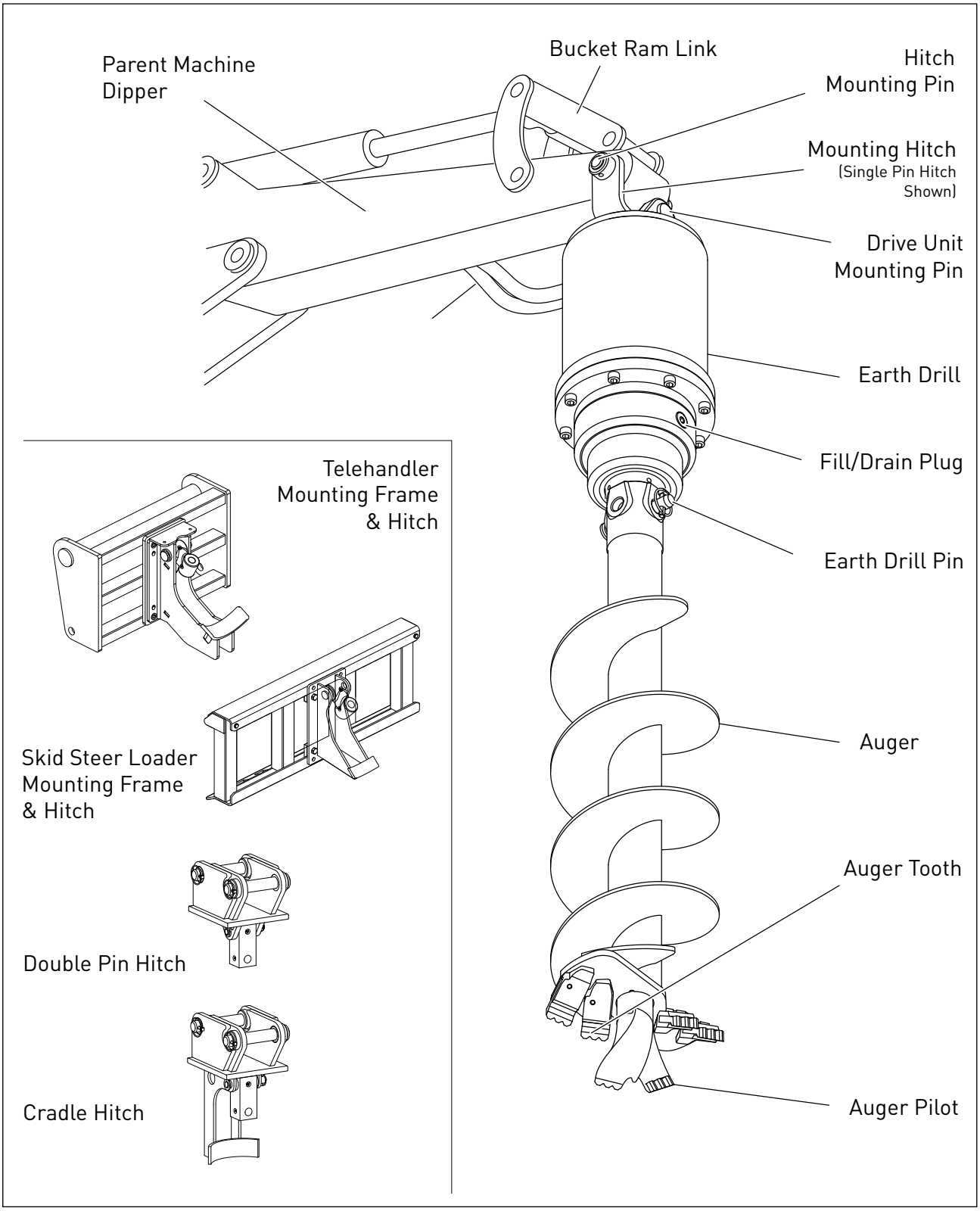

Rope Wind Hitch Parts

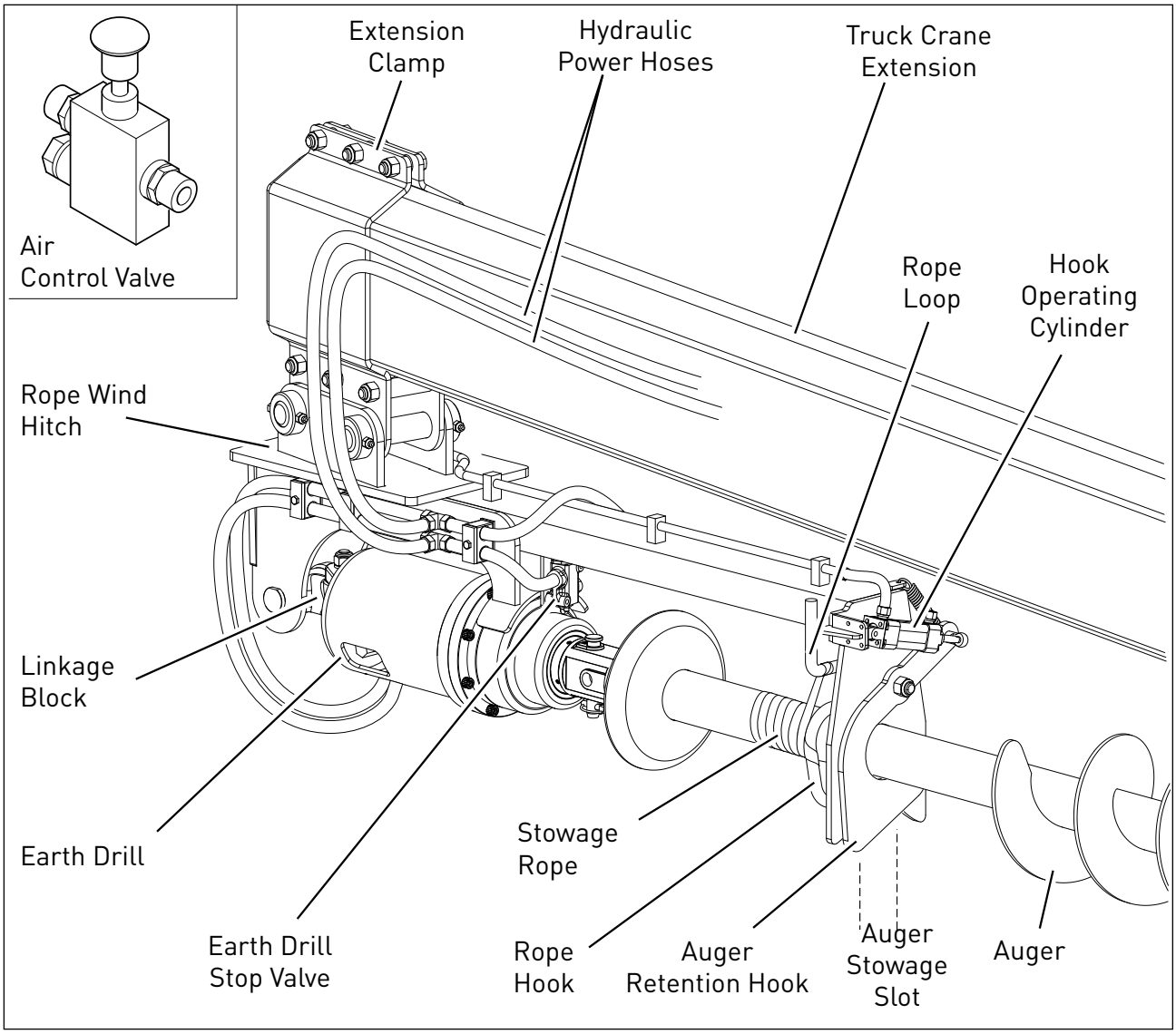

MOUNTING - HITCH FITTING

Single Pin Hitch

SAFETY FIRST

ALWAYS work in pairs (2 skilled operatives) whenever Earth Drill unit components are being assembled or disassembled from the parent machine. Always check the weight of the attachment and ensure you have the correct equipment for handling it.

ALWAYS check parent machine:

- Is in correct working order
- Is parked correctly on flat ground
- Has its hand brake **ON**, its hydraulic circuit locked out and its engine switched **OFF**.

Check that the mounting frame is of the correct model and type to fit the parent machine.
Ensure mounting frame and attachment points are clean before fitting.
Use suitably rated lifting equipment if required (see data plate for weight).

DIN 1284

NOTE: The single Pin Hitch **CANNOT** be fitted to a quick Hitch.
FITTING Ensure all components are greased on assembly:

Set the Earth Drill unit horizontally, with the output shaft towards the parent machine as in fig A.
There are two types of Pin for fitting the hood to the Mounting Hitch (1):

The **Threaded Mounting Pin** (item 2, fig B) Has a locating plate with a hole that fits over a peg in the hood ear. Align the Pin holes, fit the Pin (2), washer (3) and nylon insert nut (4) and torque to 100Nm/74ft-lb.

To fit the **Through-Bolted Mounting Pin** (item 5, fig C) Align the Pin holes and push the Pin (5) fully home taking care to line up the Through Bolt holes. At both ends of the Pin fit the Through Bolts (6) and Nylon Insert Nuts (7) and tighten to 26Nm/19ft-lb.

Fitting to the parent machine is with through-bolted Pins in all cases:
Align the Pin holes of the mounting Hitch (1) and parent machine. Align bolt location holes fit spacers (8) if required to centralise the Hitch. Push the Pin (9) fully home, taking care to line up the Through Bolt holes. Fit the Through Bolts (10) and Nylon Insert Nuts (11) and tighten to 26Nm/19ft-lb.
Once fitted, check the Earth Drill swings freely in all directions.

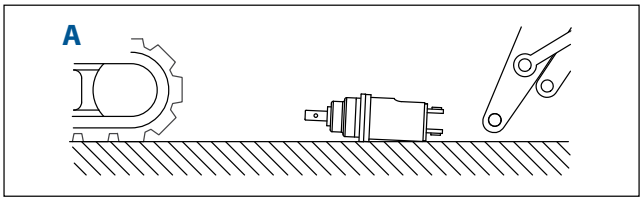

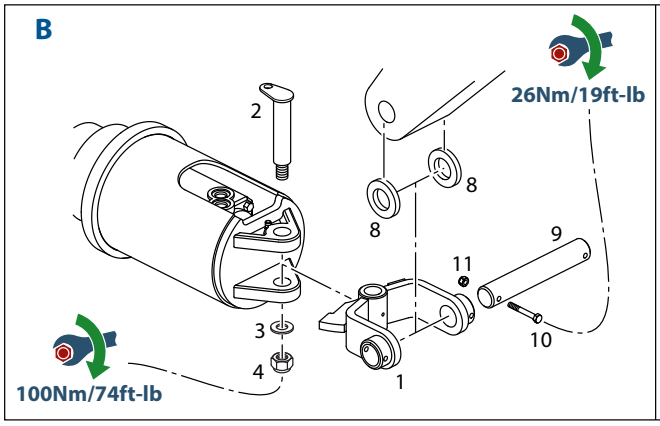

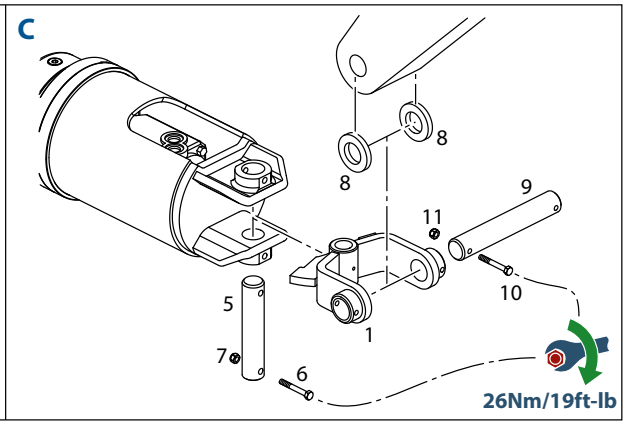

Double Pin Hitch

SAFETY FIRST

ALWAYS work in pairs (2 skilled operatives) whenever Earth Drill unit components are being assembled or disassembled from the parent machine. Always check the weight of the attachment and ensure you have the correct equipment for handling it

ALWAYS check parent machine:

- Is in correct working order
- Is parked correctly on flat ground
- Has its hand brake **ON**, its hydraulic circuit locked out and its engine switched **OFF**.

Check that the mounting frame is of the correct model and type to fit the parent machine.
Ensure mounting frame and attachment points are clean before fitting.
Use suitably rated lifting equipment if required (see data plate for weight).

DIN 1284

NOTE: If a quick Hitch is fitted to the parent machine, refer to the quick Hitch manufacturer's installation instructions for correct fitting procedure.
FITTING ensure all components are greased on assembly:

Set the Earth Drill unit horizontally, with the output shaft towards the parent machine as in fig A.

There are two types of Pin for fitting the hood to the Mounting Hitch (1):

The **Threaded Mounting Pin** (item 2, fig B) has a locating plate with a hole that fits on a peg in the hood ear. Align the Pin holes, fit the Pin (2), washer (3) and nylon insert nut (4) and torque to 100Nm/74ft-lb.

To fit the **Through-Bolted Mounting Pin** (item 5, fig C), align the Pin holes and push the Pin (5) fully home taking care to line up the Through Bolt holes. At both ends of the Pin fit the Through Bolts (6), Nylon Insert Nuts (7) and tighten to 26Nm/19ft-lb.

There are two types of Pin for fitting the Mounting Hitch (1) to the Parent Machine:

To attach a **Linch Pin** fitting (item 8, fig B), align the Pin holes, push the Pin (8) fully home and fit the linch Pin (9)

To fit the **Through-Bolted Mounting Pin** (10, fig C), align the Pin holes and push the Pin (10 fully home taking care to line up the Through Bolt holes, fit the Through Bolts (11) and Nylon Insert Nuts (12) and tighten to 26Nm/19ft-lb.

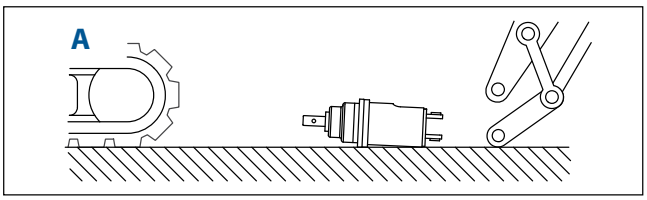

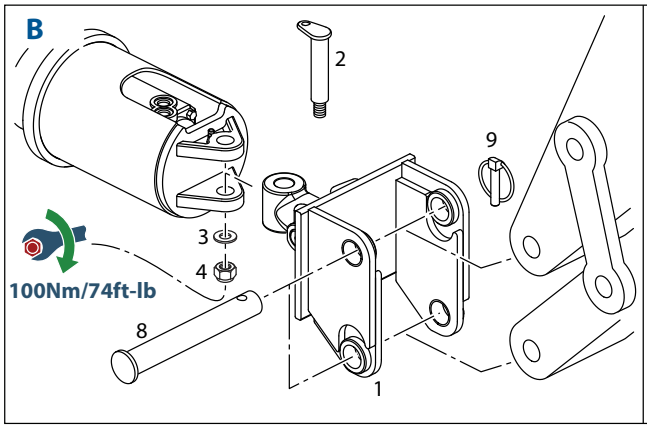

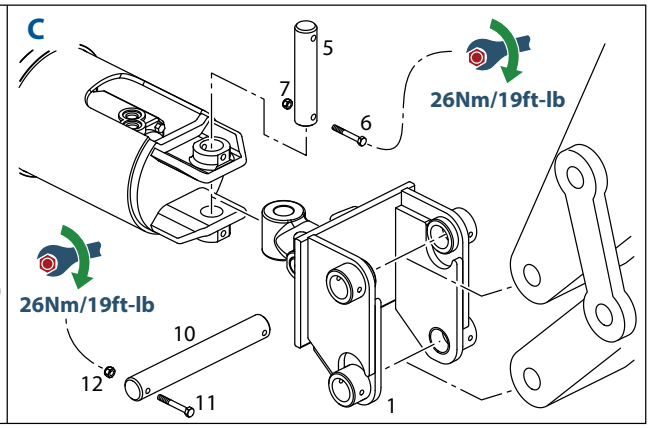

Cradle Hitch

SAFETY FIRST

ALWAYS work in pairs (2 skilled operatives) whenever Earth Drill unit components are being assembled or disassembled from the parent machine. Always check the weight of the attachment and ensure you have the correct equipment for handling it.

ALWAYS check parent machine:

- Is in correct working order
- Is parked correctly on flat ground
- Has its hand brake **ON**, its hydraulic circuit locked out and its engine switched **OFF**.

Check that the mounting frame is of the correct model and type to fit the parent machine.
Ensure mounting frame and attachment points are clean before fitting.
Use suitably rated lifting equipment if required (see data plate for weight).

DIN 1284

NOTE: If a quick Hitch is fitted to the parent machine, refer to the quick Hitch manufacturer's installation instructions for correct fitting procedure.
FITTING Ensure all components are greased on assembly:

Set the Earth Drill Unit horizontally in the cradle Hitch, with the output shaft towards the parent machine as in Fig A.

There are two types of Pin for fitting the Hood to the Mounting Hitch (1):

The **Threaded Mounting Pin** (item 2, Fig B) has a locating plate with a hole that fits on a peg in the hood ear. Align the Pin holes, fit the Pin (2), Washer (3) and Nylon Insert Nut (4) and torque to 100Nm/74ft-lb.

To fit the **Through-Bolted Mounting Pin** (item 5, Fig C), align the Pin holes and push the Pin (5) fully home taking care to line up the Through Bolt holes. At both ends of the Pin fit the Through Bolts (6) and Nylon Insert Nuts (7) and tighten to 26Nm/19ft-lb.

There are two types of Pin for fitting the Mounting Hitch (1) to the Parent Machine:

To attach a **Linch Pin** fitting (item 8, Fig B), align the Pin holes, push the Pin (8) fully home and fit the Linch Pin (9)

To fit the **Through-Bolted Mounting Pin** (item 10, Fig C), align the Pin holes and push the Pin (10) fully home taking care to line up the Through Bolt holes, fit the Through Bolts (11) and Nylon Insert Nuts (12) and tighten to 26Nm/19ft-lb.

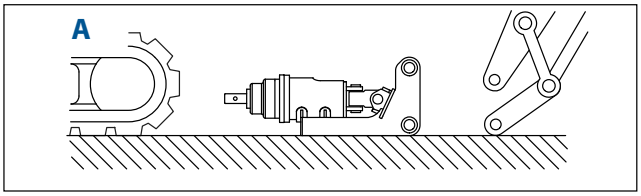

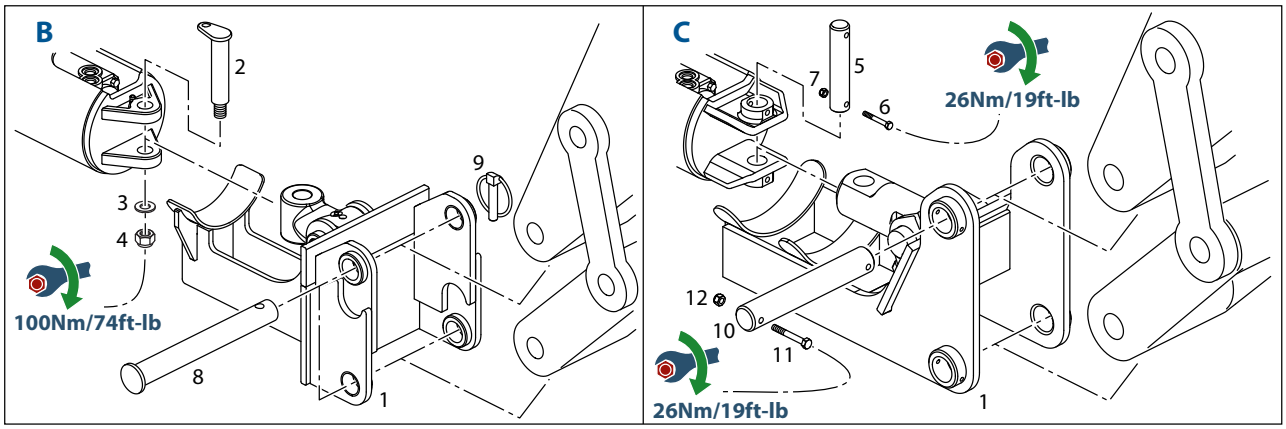

Skid Steer Loader & Telehandler

SAFETY FIRST

ALWAYS work in pairs (2 skilled operatives) whenever Earth Drill unit components are being assembled or disassembled from the parent machine. Always check the weight of the attachment and ensure you have the correct equipment for handling it.

ALWAYS check parent machine:

- Is in correct working order
- Is parked correctly on flat ground
- Has its hand brake **ON**, its hydraulic circuit locked out and its engine switched **OFF**.

Check that the mounting frame is of the correct model and type to fit the parent machine.
Ensure mounting frame and attachment points are clean before fitting.
Use suitably rated lifting equipment if required (see data plate for weight).

DIN 1284

FITTING: Ensure all components are greased on assembly:

A Slot the top of the parent machine frame under the top edge of the Mounting Frame or Locating Hooks (refer to parent machine operator's manual).

B Swing the parent machine frame to the vertical position.

C Following the parent machine operator's manual, ensure that the Mounting Frame is securely locked in place.

D Working as a pair, lift the Earth Drill in to place with the port opening facing upwards Align hood ears with the hole in the linkage block. Secure the Earth Drill with the Pin (1), Washer (2) and Nylon Insert Nut (3) and torque to 100Nm/74ft-lb.

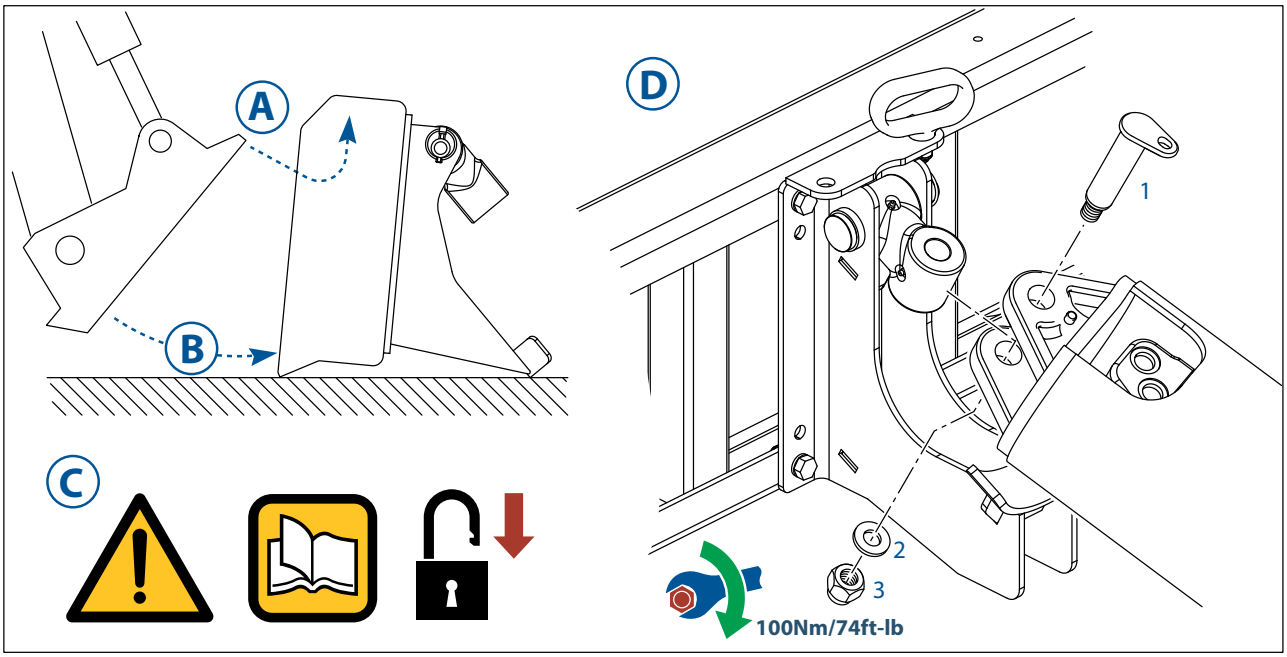

MOUNTING - TRUCK CRANE

Linkage Block

SAFETY FIRST

ALWAYS work in pairs (2 skilled operatives) whenever Earth Drill unit components are being assembled or disassembled from the parent machine. Always check the weight of the attachment and ensure you have the correct equipment for handling it

ALWAYS check parent machine:

- Is in correct working order
- Is parked correctly on flat ground
- Has its hand brake **ON**, its hydraulic circuit locked out and its engine switched **OFF**.

Check that the mounting frame is of the correct model and type to fit the parent machine.
Ensure mounting frame and attachment points are clean before fitting.
Use suitably rated lifting equipment if required (see data plate for weight).
On Truck Cranes, the Earth Drill is attached via a Linkage Block.
The Linkage Block fits between the hook attachment ears.

DIN 1284

FITTING Ensure all components are greased on assembly:

Set the Earth Drill Unit horizontally, with the output shaft towards the parent machine as in Fig A.

The Threaded Mounting Pin has a locating plate with a hole that fits on a peg in the hood ear Fig B. Align the Pin holes in the hood ears and Linkage Block (1), fit the Pin (2), Washer (3) and Nylon Insert Nut (4) and torque to 100Nm/74ft-lb.

Align the holes in the Linkage Block (1) with the attachment ears on the parent machine Fig B.

Insert the mounting Pin (5) and spring clip (6)

Once fitted, check that the Linkage Block swings freely.

Mounting pionts may differ. (refer to parent machine operator's manual for further information).

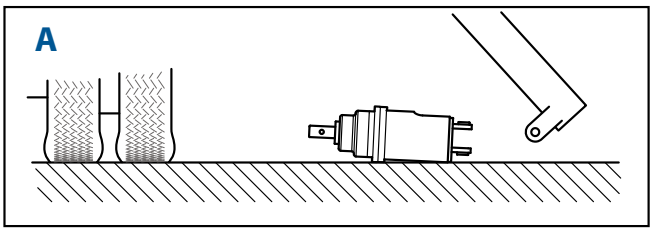

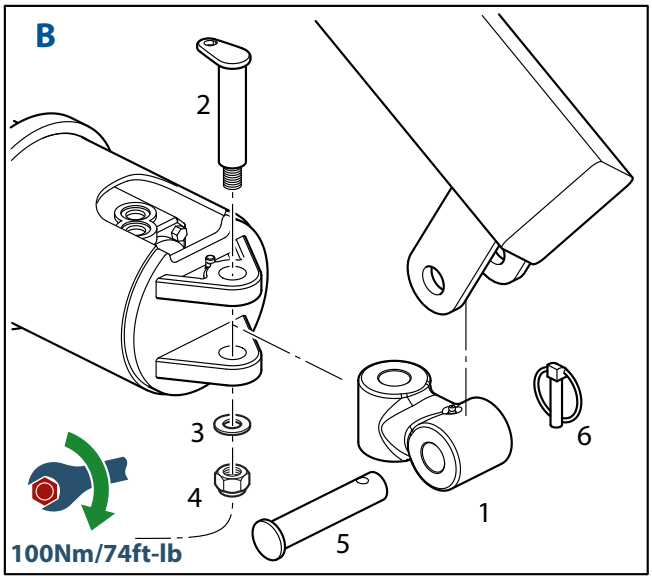

Rope Wind Hitch

SAFETY FIRST

ALWAYS work in pairs (2 skilled operatives) whenever Earth Drill unit components are being assembled or disassembled from the parent machine. Always check the weight of the attachment and ensure you have the correct equipment for handling it.

ALWAYS check parent machine:

- Is in correct working order
- Is parked correctly on flat ground
- Has its hand brake **ON**, its hydraulic circuit locked out and its engine switched **OFF**.

Check that the mounting Hitch is of the correct model and type to fit the parent machine.
Ensure mounting Hitch and attachment points are clean before fitting.
Use suitably rated lifting equipment if required (see data plate for weight).

Attach Extension Clamp

Dedicated extension clamps are supplied for each model of truck crane.
Fit the 2 halves of the boom clamp with M20 bolts, Nylon Insert Nuts, Washers & Spacers provided and torque to 385Nm/284ft-lb.

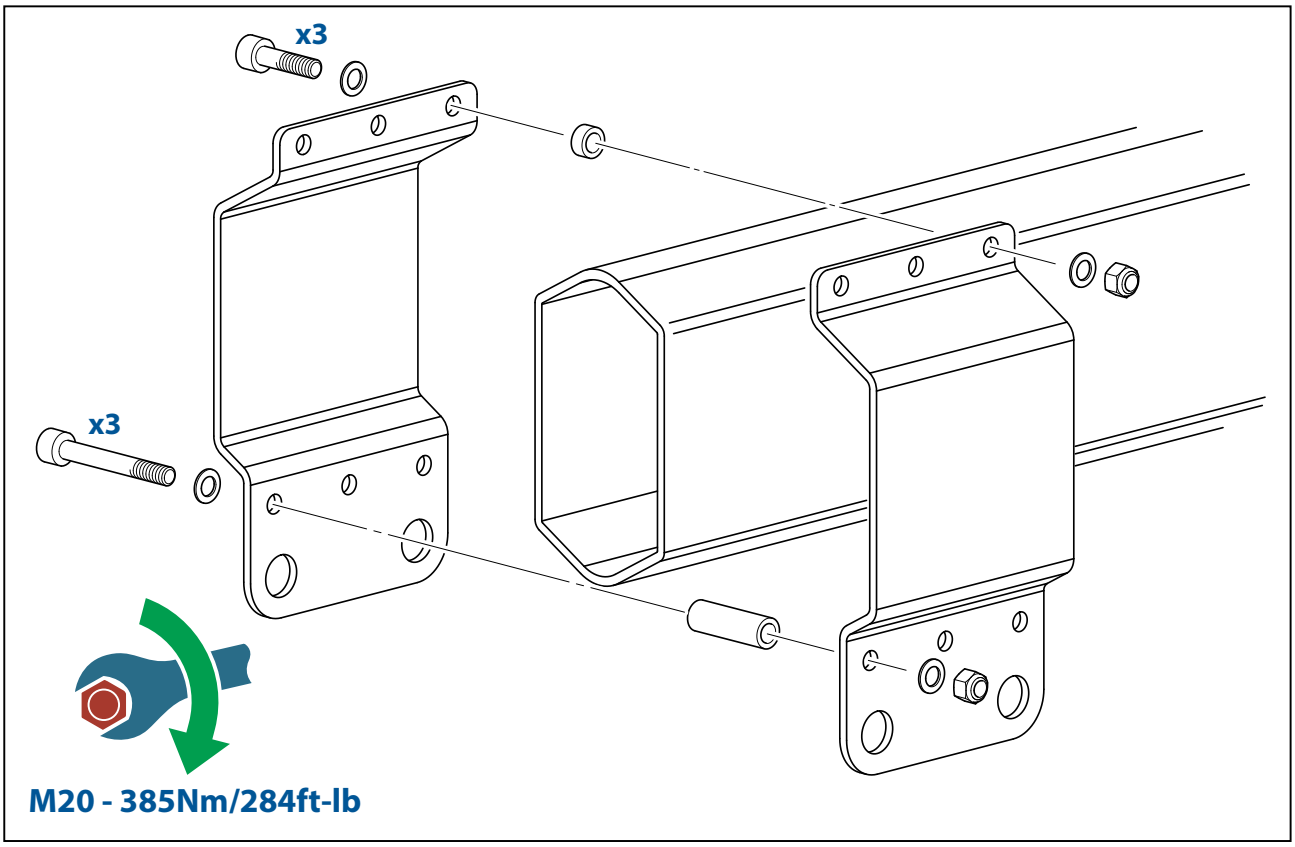

Rope Wind Hitch (continued)

Attach Rope Wind Hitch
Fit the hitch with the 2 pins and secure with M10 bolts & nuts. Tighten to 46Nm/34ft-lb.

The Rope wind Hitch is supplied with a Linkage Block fitted. Refer to Linkage Block section to fit Earth Drill (see page 19).

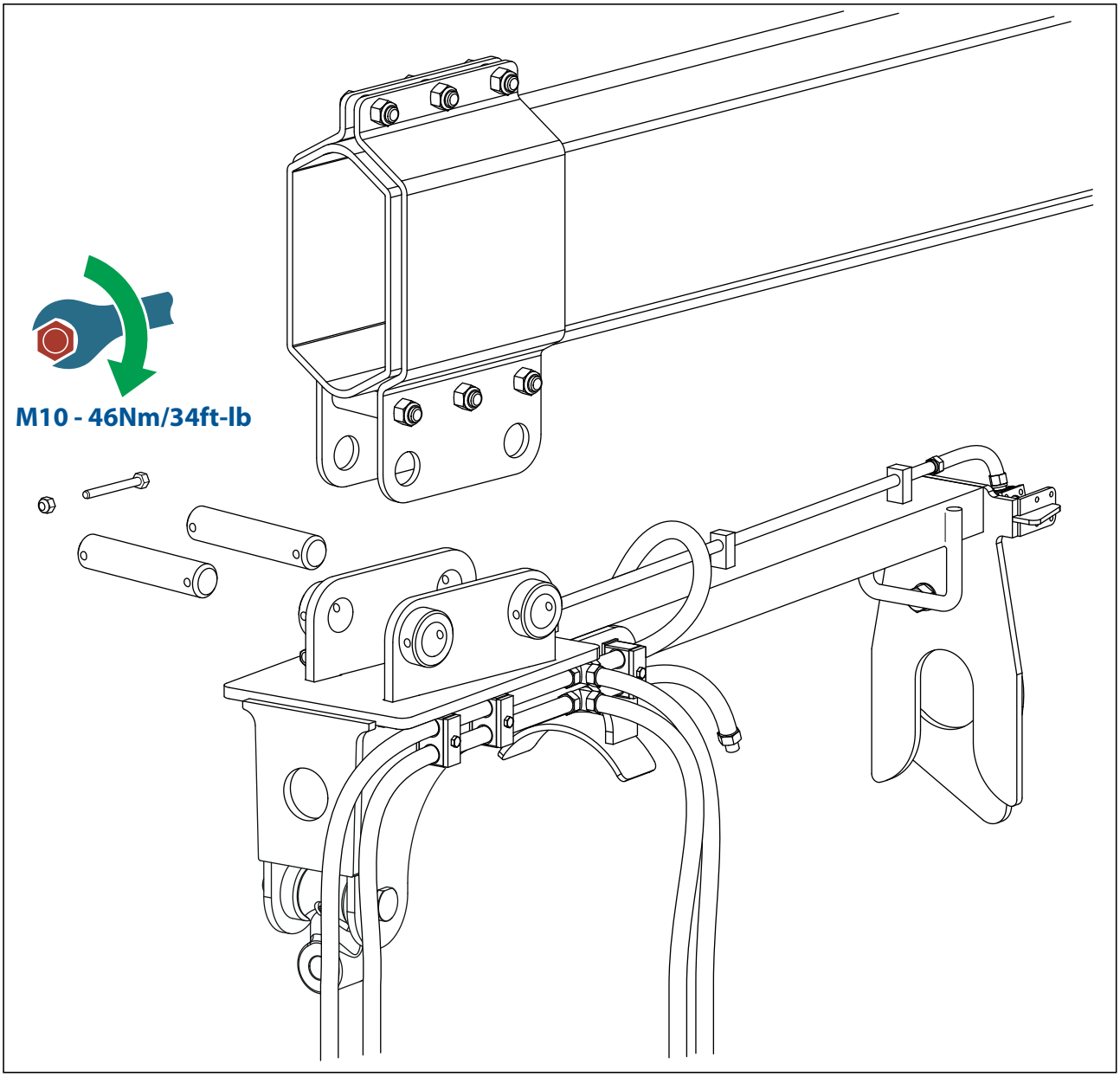

MOUNTING - 150XHT / 250XHT

SAFETY FIRST

ALWAYS work with 3 skilled operatives whenever Earth Drill unit components are being assembled or disassembled from the parent machine. Always check the weight of the attachment and ensure you have the correct equipment for handling it

ALWAYS check parent machine:

- Is in correct working order
- Is parked correctly on flat ground
- Has its hand brake **ON**, its hydraulic circuit locked out and its engine switched **OFF**

Check that the mounting frame is of the correct model and type to fit the parent machine.
Ensure mounting frame and attachment points are clean before fitting.
Use suitably rated lifting equipment if required (see data plate for weight).

DIN 1284

FITTING Ensure all components are greased on assembly:

Before moving the Cradle ensure the Earth Drill is firmly secured to the Cradle by the Drive Pin and Ratchet Straps (Fig A).

Unscrew the 2 fixing bolts and remove Lifting Yoke from its transit position on the Cradle. Re-fit Yoke in to it's lifting position using the 2 fixing bolts (Fig B).

If the correct position is not used the Cradle and Drill will be unstable when lifted.

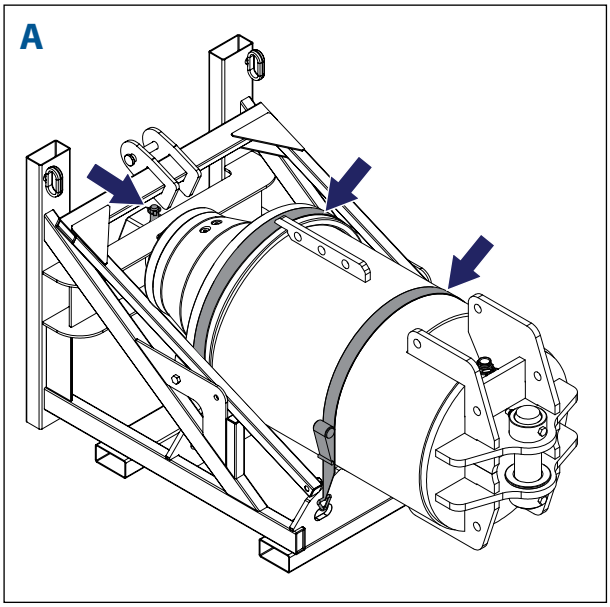

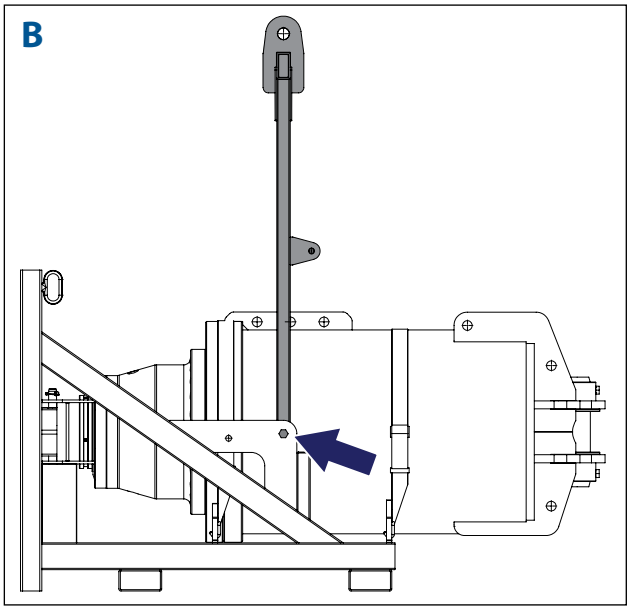

Mounting Unit from Cradle

Slowly lift the Cradle in to upright position, one person should be stood on either side of the Cradle holding the grab handles to steady the Cradle during the lift (Fig C).

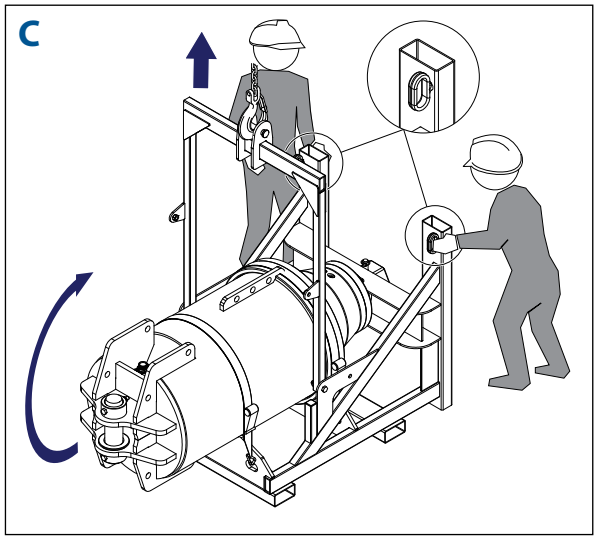

- Fit Mounting Hitch to the parent machine (item 1, Fig D).
- Remove nuts and bolts from Hood Pin and remove Pin (items 2, 3, & 4 Fig D).
- Align the Pin holes on the Mounting Hitch and Hood. Push the Hood Pin fully home taking care to line up the bolt holes.
- Refit nuts and bolts at both ends of the Pin tighten to 200Nm/147ft-lb.
- Remove Drive Pin and Ratchet Straps, lift Earth Drill off Cradle with parent machine (items 5 & 6, Fig D).

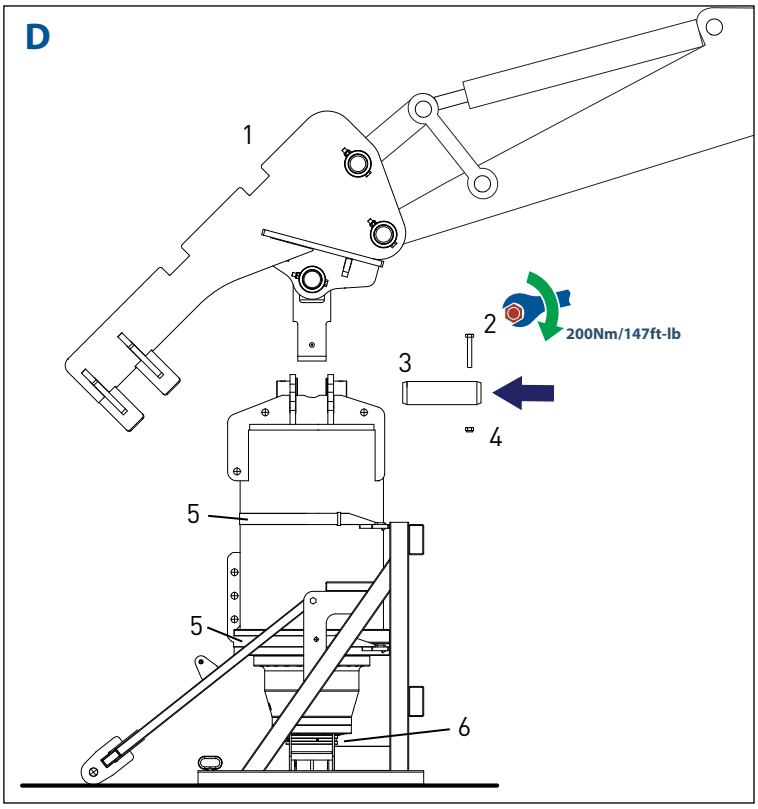

HYDRAULIC CONNECTIONS

WARNING:

Hydraulic fluid under pressure can penetrate the skin or eyes and cause serious personal injury, blindness or death. Fluid leaks under pressure may not be visible. Use a piece of card or wood to find leaks. **DO NOT** use your bare hands. Wear safety goggles to protect your eyes. If any fluid is injected into the skin, it **MUST** be surgically removed. Seek immediate medical attention.

All Norm Engineering Earth Drill Units require a 'flow' and 'return' of hydraulic oil from the parent machine's auxiliary hydraulic power supply to operate. All gearboxes are reversible, but require the host machine to be fitted with a two-way flow auxiliary circuit. (Check with parent machine dealer for advice).

When fitting hydraulic hoses, ensure that they are tightened to the correct torque for the hose fittings (Fig A).

Quick Release Couplers are required for connection to the parent machine, but may not supplied with the unit. These can be sourced locally and should be compatible with the auxiliary hydraulic Quick Release Couplers on the parent machine (Figs B & C). The parent machine auxiliary hydraulic connections are normally located near the end of the loader arms, excavator dipper or truck crane booms.

Ensure that the drilling rotation of the Earth Drill Unit is clockwise.

It is critical that the supply of oil is within the stated flow & pressure limits for the particular Earth Drill;

Refer to the serial plate on the top of the Earth Drill hood (see page 4).

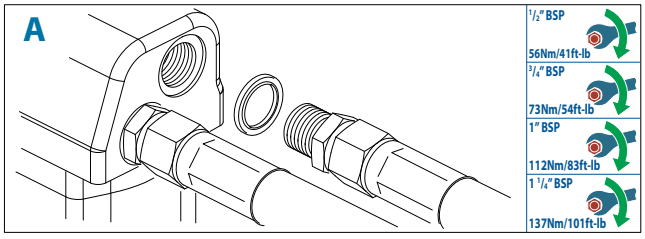

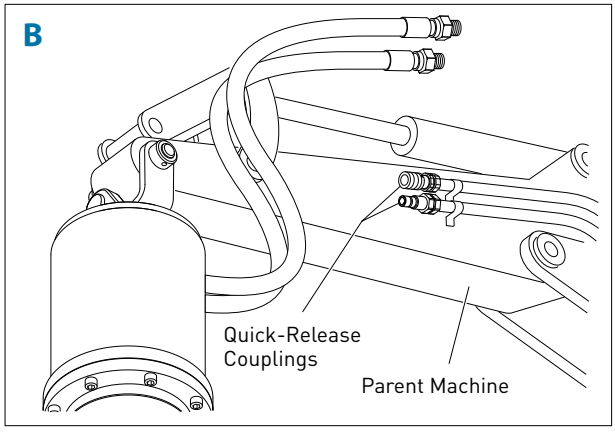

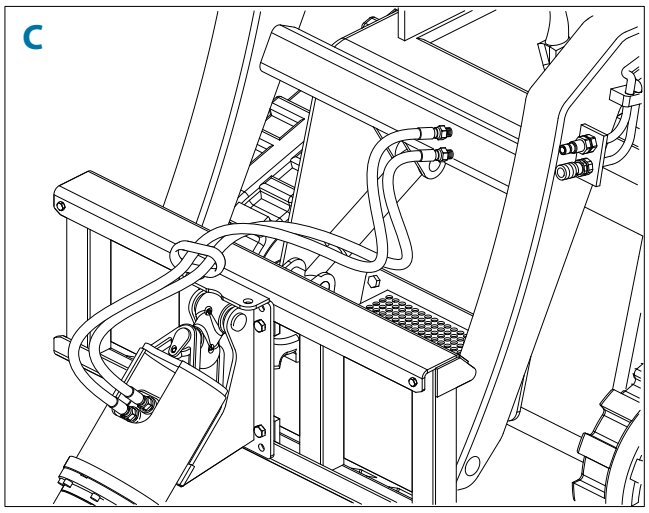

Rope Wind Hitch

Attach Hydraulic Hoses - Earth Drill
Fit the hoses to the motor ports. Tighten to 56Nm/41ft-lb.

Attach Hoses - Earth Drill Stop Valve
A hydraulic valve is fitted at the top of the rope wind hitch.

The purpose of the valve is to stop the rotation of the Auger when it reaches its stowed position.

This function is described in more detail on page 45.

Fit the hoses to the Earth Drill Stop Valve. Tighten to 56Nm/41ft-lb.

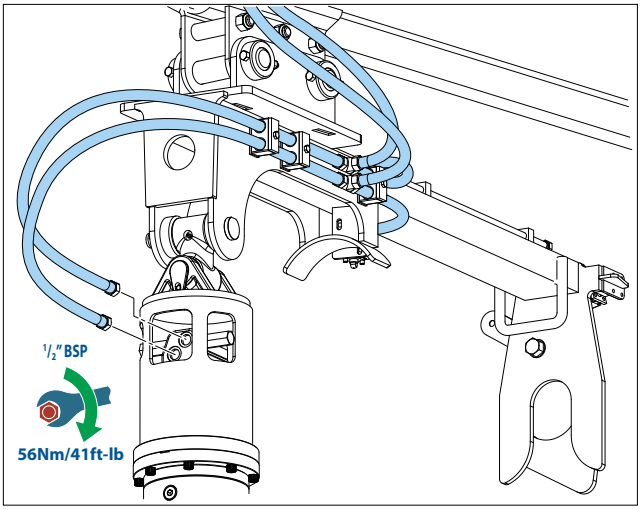

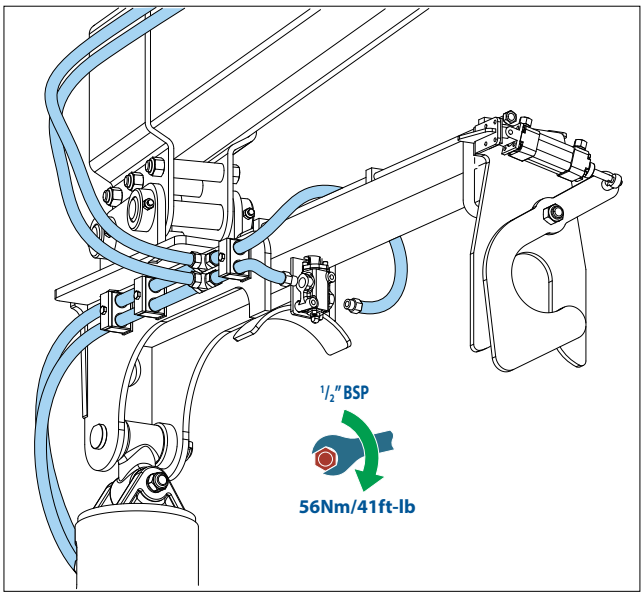

Earth Drill Maximum Permissible Back Pressures

Model	bar / psi
1200	15 / 217
X1500	28 / 406
X2000	28 / 406
X2500	28 / 406
ML1500	28 / 406
ML2000	28 / 406
ML2500	28 / 406
3000TC	33 / 478
3000	33 / 478

Model	bar / psi
3500	33 / 478
4500	59 / 855
5000	45 / 652
5500TC	33 / 478
5500	45 / 652
7000TC	59 / 855
7000	39 / 565
8000	38 / 551

Model	bar / psi
10 000	12 / 174
12 000	6 / 87
15 000	7 / 101
17 000	6 / 87
20 000	15 / 217
25 000	15 / 217

Model	bar / psi
30 000	3 / 43
35 000	20 / 290
40 000	26 / 377
42 000	20 / 290
50 000	4.5 / 65
65 000	4.5 / 65
150XHT	4.5 / 65
250XHT	20 / 290

Case drain line fitting

Some of the larger Norm Engineering Earth Drills are fitted with a case drain line.

This is a flexible hose protruding from the Earth Drill hood and must be connected to a line that returns to the machine's hydraulic fluid reservoir. The parts required to complete this circuit will vary, depending on the machine and the hydraulic equipment fitted. Consequently, case drain hose fittings are not supplied with the Earth Drill and must be sourced separately.

When fitting a case drain line, there must be no restrictions to the flow between the Earth Drill and the reservoir. You **MUST** not use quick release couplings.

You may receive an installation form with your unit, this form must be completed and returned to Norm Engineering to validate the warranty.

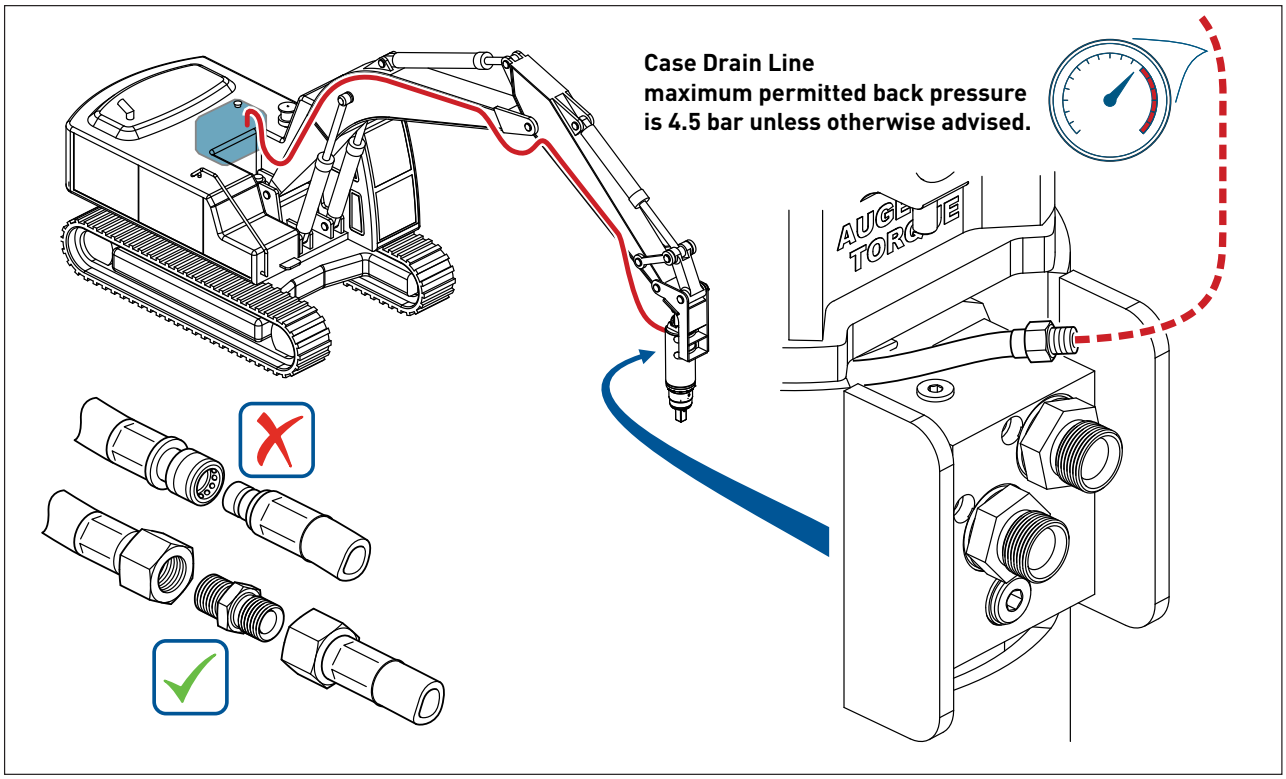

Hoses Specifications

Minimum internal diameter

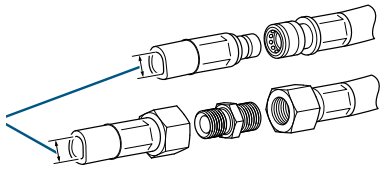

Minimum hydraulic hose requirements		
Model	**Minimum internal hose diameter (in/mm)**	**Minimum working pressure Bar/PSI**
1200	1/2" / 12.7mm	185Bar / 2680PSI
X1500	1/2" / 12.7mm	205Bar / 2973PSI
X2000	1/2" / 12.7mm	240Bar / 3480PSI
X2500	1/2" / 12.7mm	240Bar / 3480PSI
ML1500	1/2" / 12.7mm	205Bar / 2973PSI
ML2000	1/2" / 12.7mm	240Bar / 3480PSI
ML2500	1/2" / 12.7mm	240Bar / 3480PSI
3000	1/2" / 12.7mm	240Bar / 3480PSI
3500	1/2" / 12.7mm	240Bar / 3480PSI
4500	1/2" / 12.7mm	240Bar / 3480PSI
5000	1/2" / 12.7mm	240Bar / 3480PSI
5500	1/2" / 12.7mm	240Bar / 3480PSI
7000	3/4" / 19.0mm	260Bar / 3771PSI
8000	3/4" / 19.0mm	240Bar / 3480PSI
10 000	3/4" / 19.0mm	240Bar / 3480PSI
12 000	1" / 25.4mm	240Bar / 3480PSI
15 000	1" / 25.4mm	240Bar / 3480PSI
17 000	1" / 25.4mm	260Bar / 3770PSI
20 000	1" / 25.4mm	240Bar / 3480PSI
25 000	1" / 25.4mm	240Bar / 3480PSI
30 000	1 1/4" / 31.8mm	450Bar / 6526PSI
35 000	1" / 25.4mm	310Bar / 4496PSI
40 000	1" / 25.4mm	240Bar / 3480PSI
42 000	1" / 25.4mm	310Bar / 4496PSI
50 000	1 1/2" / 31.8mm	320Bar / 4640PSI
65 000	1 1/2" / 31.8mm	320Bar / 4640PSI
3000TC	1/2" / 12.7mm	260Bar / 3771PSI
5500TC	1/2" / 12.7mm	260Bar / 3771PSI
7000TC	1/2" / 12.7mm	260Bar / 3771PSI
150XHT	1 1/2" / 38.1mm	360Bar / 5221PSI
250XHT	1 1/6" / 29.6mm	310Bar / 4496PSI

Replacement hydraulic hoses **MUST** be rated equal or greater than the minimum working pressure.

AIR SYSTEM CONNECTION

Rope Wind - Auger Hook Control

The Auger retention hook is operated by a momentary valve, which operates as follows;-

Normal state = OFF (Fig.1):

With the button in it's Normal state, the system is vented and the Auger hook is retained in its closed position under spring tension.

Pressed = ON (Fig. 2):

While the operating button is depressed, the valve pressurises the system and opens the retaining hook.

Releasing the button returns the valve to the Normal (vented) state (Fig.1), allowing the hook to return to its closed position under spring tension.

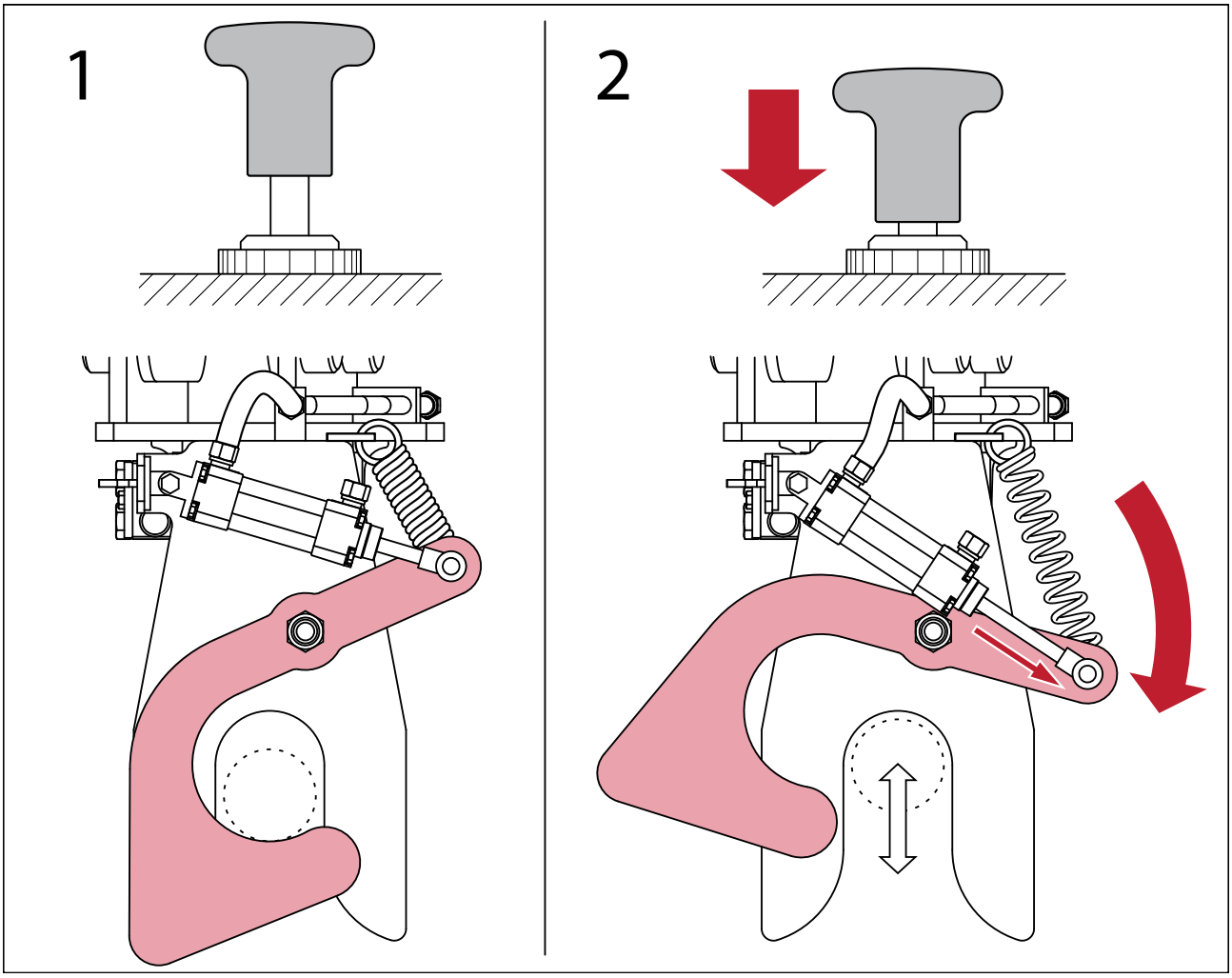

When using compressed air, you should be aware of the following safety guidelines:

NEVER point an air hose at anyone, including yourself.

ALWAYS wear adequate eye protection. Use safety glasses with side shields or goggles.

BEFORE using compressed air, check the air hose for damage or signs of failure. Make sure connections and couplings are tight.

BEFORE disconnecting an air line, the air should be cut off, and the remaining air bled from the line.

ALWAYS keep air hoses off the floor where they become tripping hazards and are subject to damage.

Auger Hook Air Control - Fitting

The control valve must be fitted close to the parent machine controls.
It requires a compressed air supply of no more then 10bar (145psi).

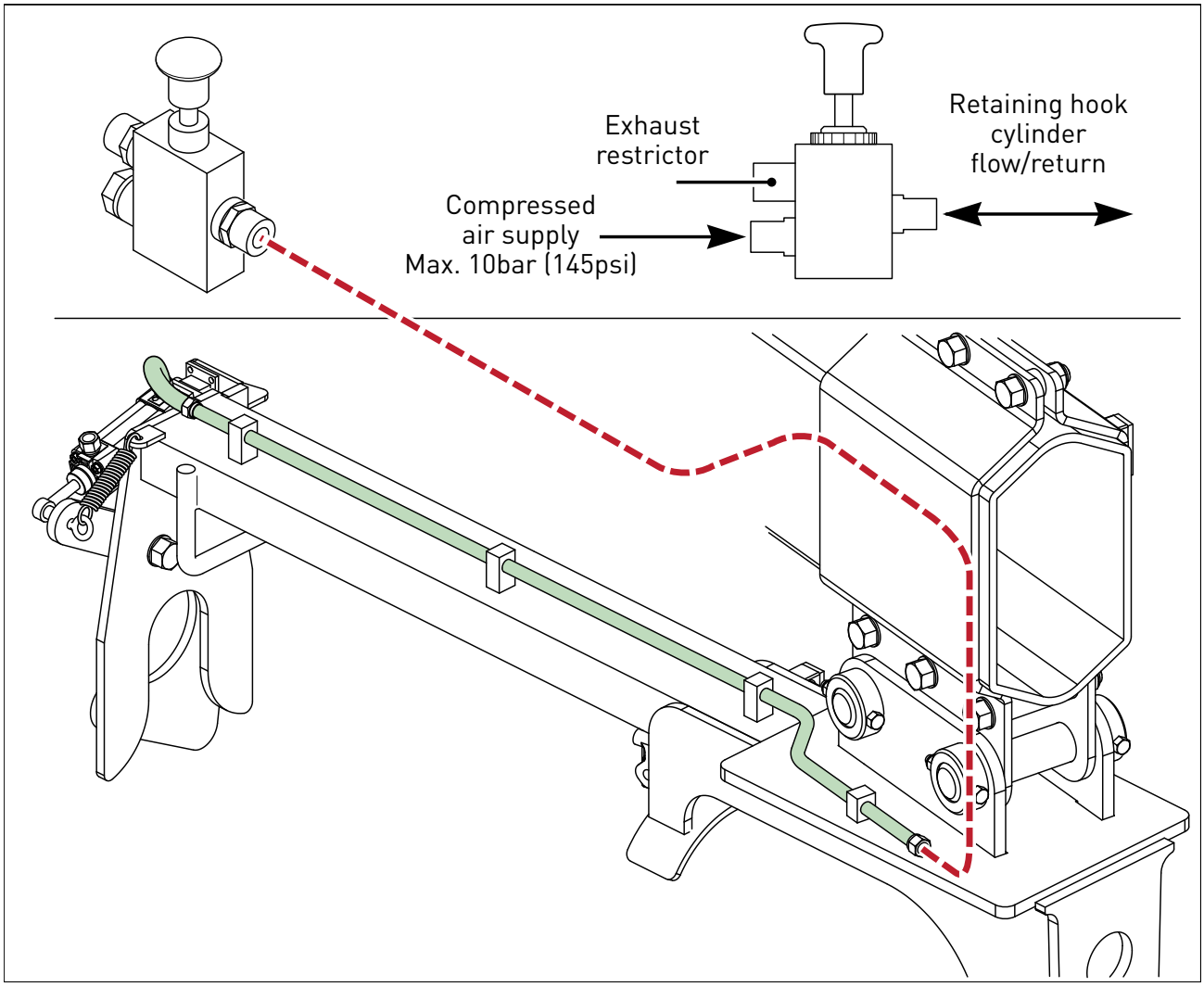

RUNNING-IN

To maximise the life of the unit, it must be run in for a period.

To carry out the running in procedure, suspend the Earth Drill in it's vertical, working position.

For the duration of the running in procedure, ensure there are no bystanders within the nominated radius as defined in the risk assessment completed prior to commencing any works.

Operate the motor at 30% of rated pressure for 20 minutes in each direction before application of full operating load.

To further ensure best motor life and maintain warranty, refer to page 49 for lubrication instructions.

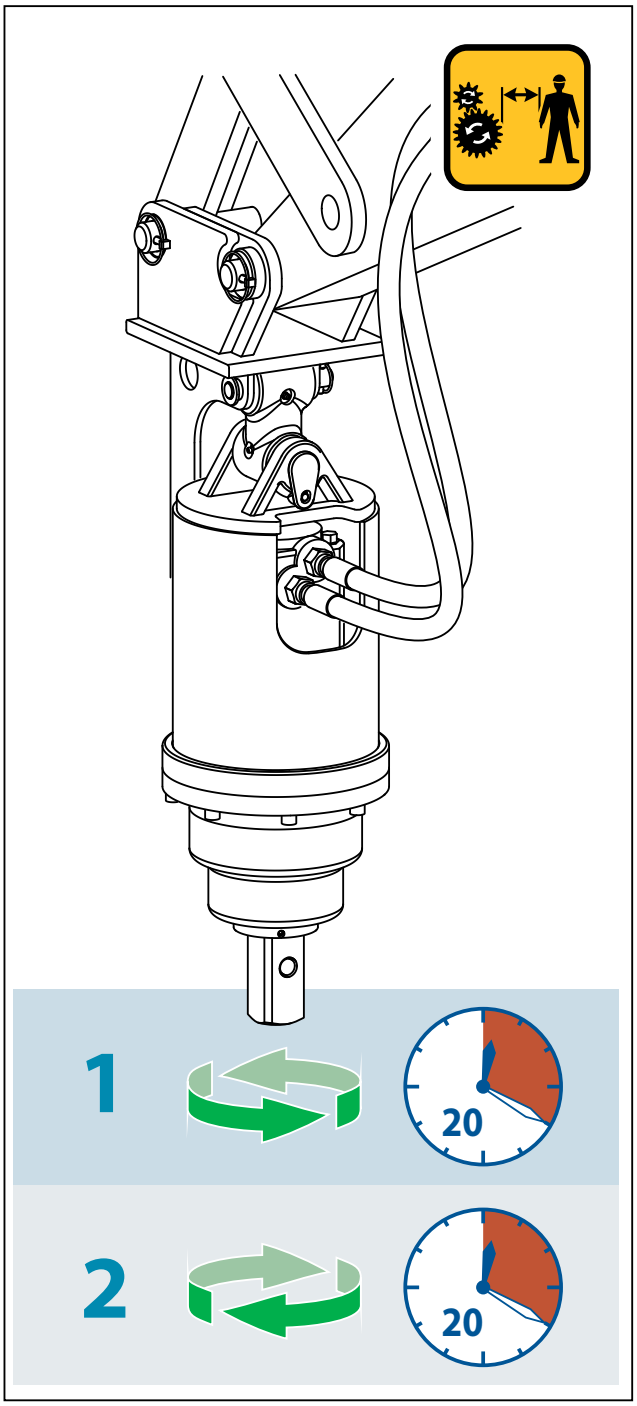

FITTING THE AUGER

SAFETY FIRST

ALWAYS work in pairs (2 skilled operatives) whenever Earth Drill Unit components are being assembled or disassembled from the parent machine.

ALWAYS check parent machine:

- Is in correct working order
- Is parked correctly on flat ground
- Has its hand brake **ON**, its hydraulic circuit locked out and its engine switched **OFF**.

CHECK that the Auger is the correct model and type to fit the Earth Drill Unit.

ENSURE that the Auger connections are clean before fitting.

USE suitably rated lifting equipment if required (see data plate for weight).

Position the Auger in the vertical work position and support it so that it cannot fall over.

Position the Earth Drill over the Auger and align the pin holes.

Lower the Earth Drill Unit onto the Auger

Locate the Earth Drill Pin

Secure the Earth Drill Pin with Linch Pin

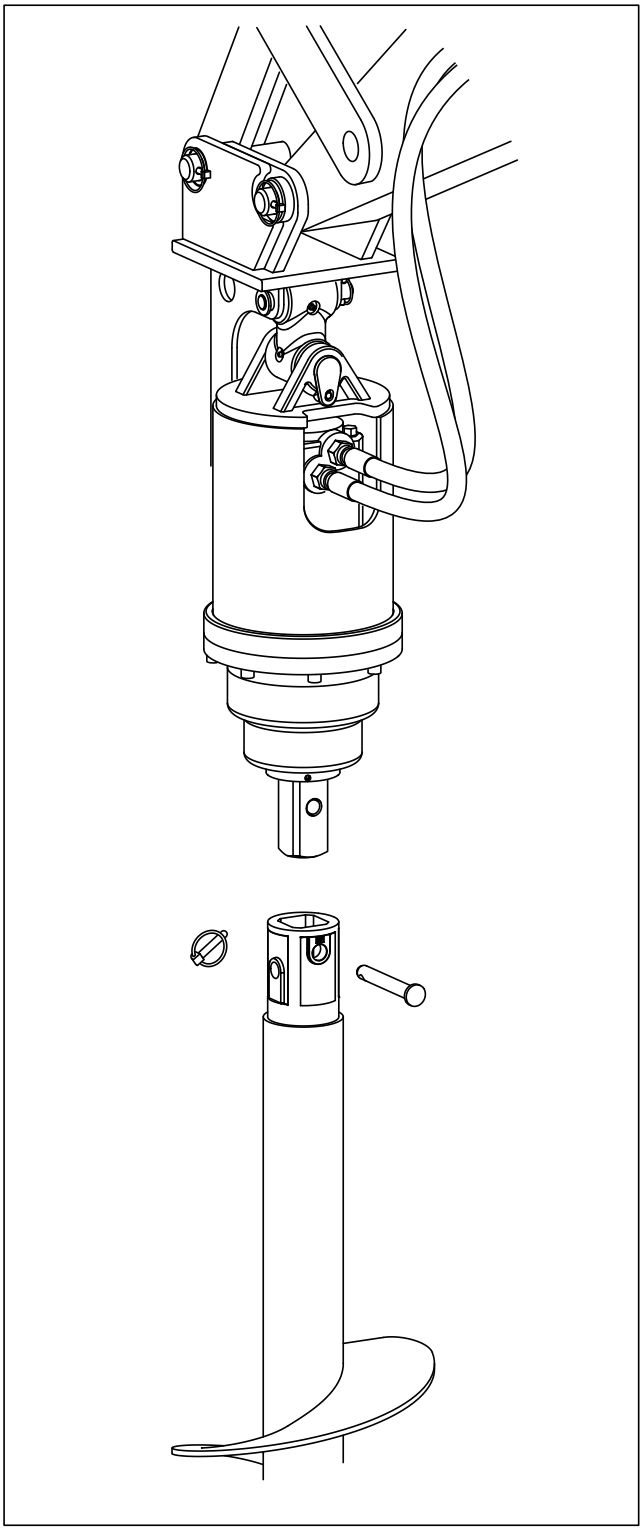

PREPARATION

CONSIDER the topography (e.g. risk of subsidence, slope angle, position to embankments and any previous excavation).

NOTE the type of soil and its condition to enable selection of suitable teeth and pilot

ALWAYS carry out a site survey and risk assessment **BEFORE** starting work

AVOID underground hazards, such as water / gas / electricity / communication lines etc.

If in doubt detection equipment and professional advice should always be considered before carrying out any work.

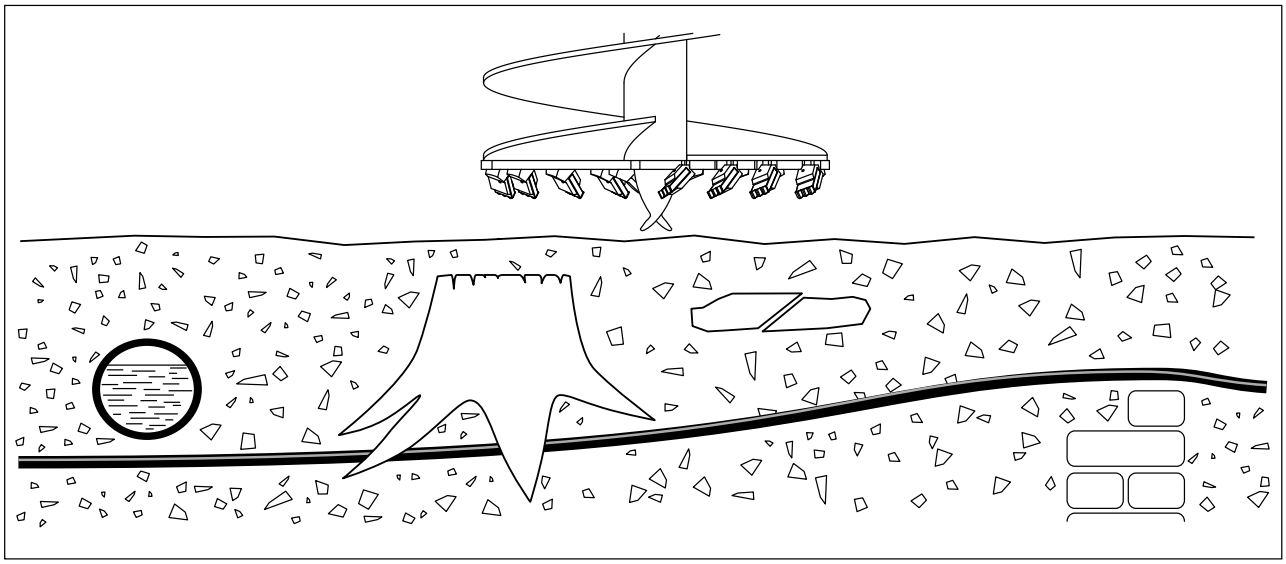

WORKING PROCEDURE

Before commencing work, ensure that:

The correct hoses are fitted and tightened correctly **(See page 24)**. The unit has been properly run in **(See page 30)**.

There are no bystanders within the nominated radius as defined in the risk assessment completed prior to commencing any works.

SET Auger in a vertical drilling position (Fig A).
ENSURE the direction of rotation is **CLOCKWISE**.
ONLY start drilling after a site survey on a pre-marked safe location **(see page 32)**.
GRADUALLY lower the parent machine arm(s) to apply down force to the Auger.
The harder the ground the more down force required.
Maintain drilling speed. **DO NOT CONTINUALLY STALL** the Earth Drill unit with excessive down force, as this will overheat the hydraulic oil and could damage the machine.
KEEP THE AUGER VERTICAL;
For skid steer machines (Fig B);
Adjust the angle of the arms, mounting frame and the position of the parent machine as necessary.
For excavators (Fig C);
Adjust the angle of the dipper and boom.
MAXIMISE efficiency and avoid damaging the Auger assembly by keeping the Auger vertical.
REGULARLY raise the Auger out of the ground to clear material from the Auger. This will help maintain drilling effectiveness and ensure your machine does not become unstable.
NEVER Drill beyond the length of the Auger.
NEVER leave the Auger assembly suspended.
ALWAYS park with the Auger on the ground.

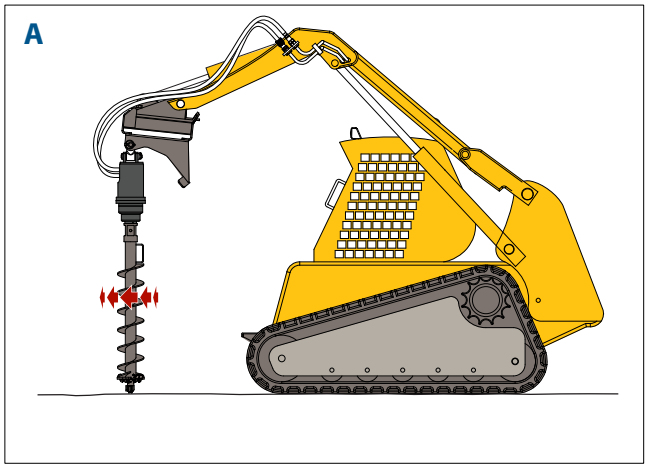

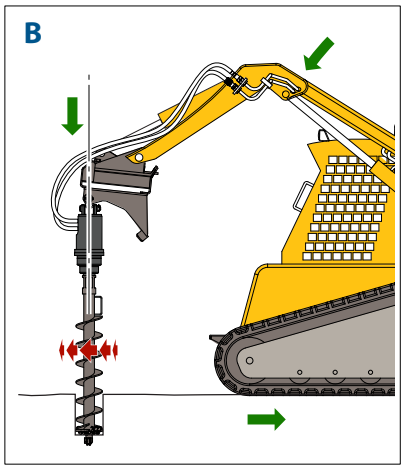

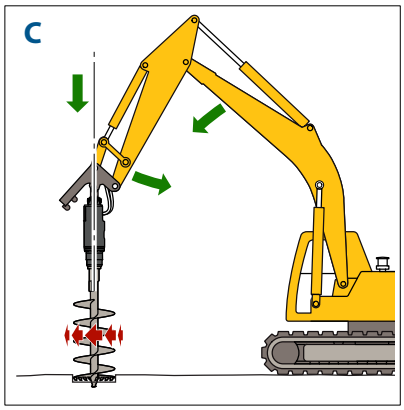

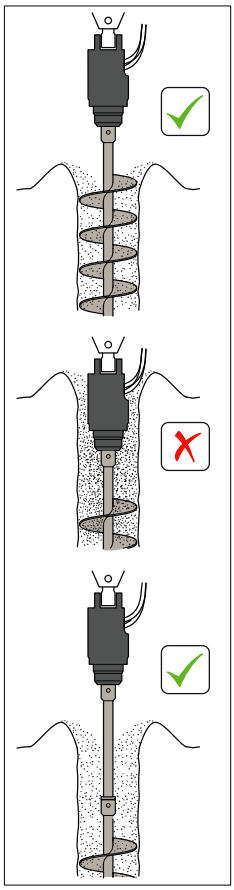

DRILLING

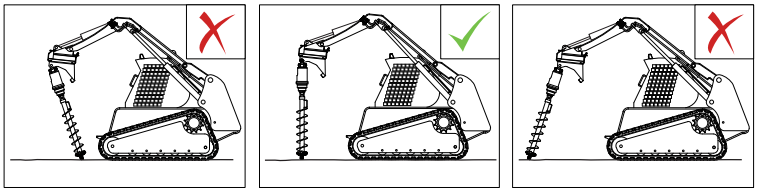

PARKING

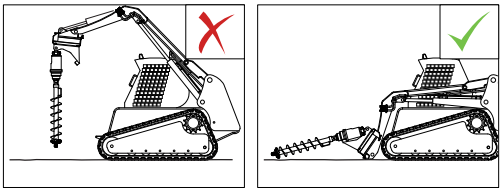

Horizontal Drilling

Before commencing work, ensure that:

The correct hoses are fitted and tightened correctly **(See page 24)**. The unit has been properly run in **(See page 30)**.

There are no bystanders within the nominated radius as defined in the risk assessment completed prior to commencing any works.

Horizontal drilling is possible with the use of an excavator. A Cradle Hitch is required to hold the Earth Drill and Auger in a horizontal position. Refer to the Cradle Hitch section for fitting instructions.

FIT Cradle Hitch in reverse orientation (Fig A).
SET Auger in a horizontal drilling position (Fig B).
ENSURE the direction of rotation is **CLOCKWISE**.
ONLY start drilling after a site survey on a pre-marked safe location **(see page 32)**.
GRADUALLY adjust the parent machine arm(s) to apply a force to the Auger in the direction of drilling.
The harder the ground the more force required. Maintain drilling speed. **DO NOT CONTINUALLY STALL** the Earth Drill unit with excessive force, as this will overheat the hydraulic oil and could damage the machine.
KEEP THE AUGER HORIZONTAL:
Adjust the angle of the dipper and boom (Fig B).
MAXIMISE efficiency and avoid damaging the Auger assembly by keeping the Auger horizontal.
REGULARLY remove the Auger out of the hole to clear material from the Auger. This will help maintain drilling effectiveness and ensure your machine does not become unstable.
NEVER Drill beyond the length of the Auger.
NEVER leave the Auger assembly suspended.
ALWAYS park with the Auger on the ground.

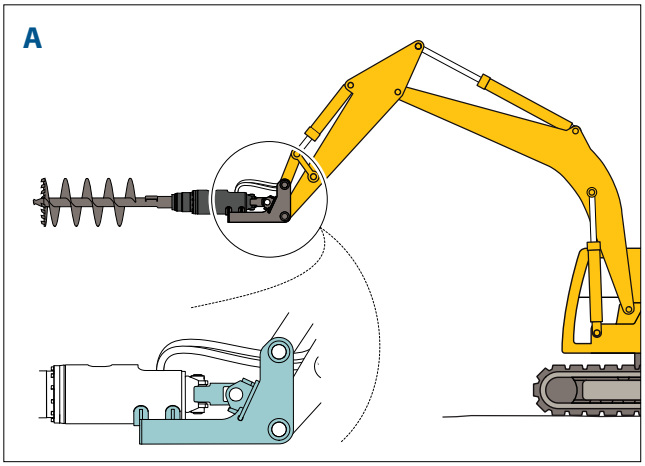

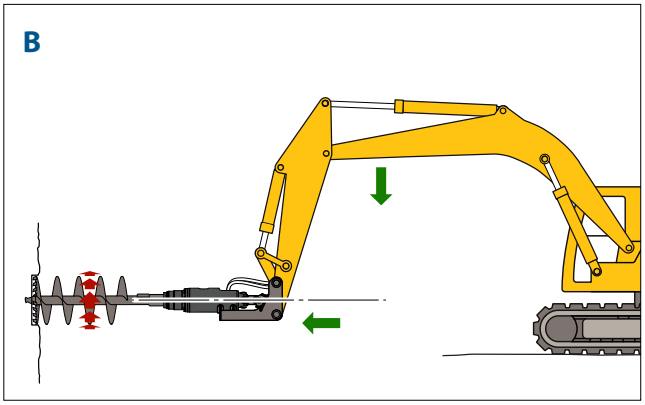

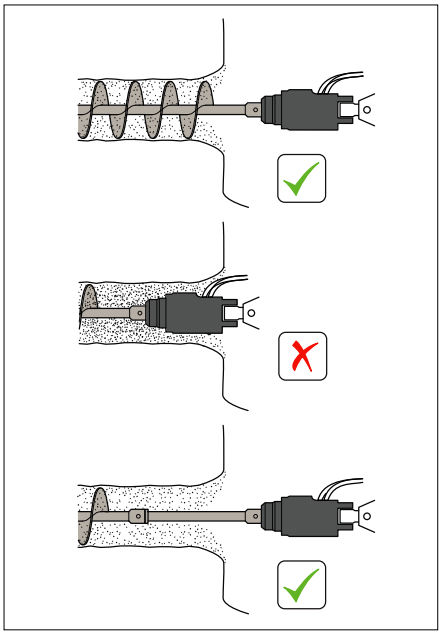

Auger Alignment

When drilling, you must keep the auger vertical at all times to avoid uneven holes and potential damage to the auger. The natural arc of the parent machine arms will push the auger out of alignment (Fig A). Continuous adjustment is required of the parent machine arms to maintain vertical alignment (Fig B).

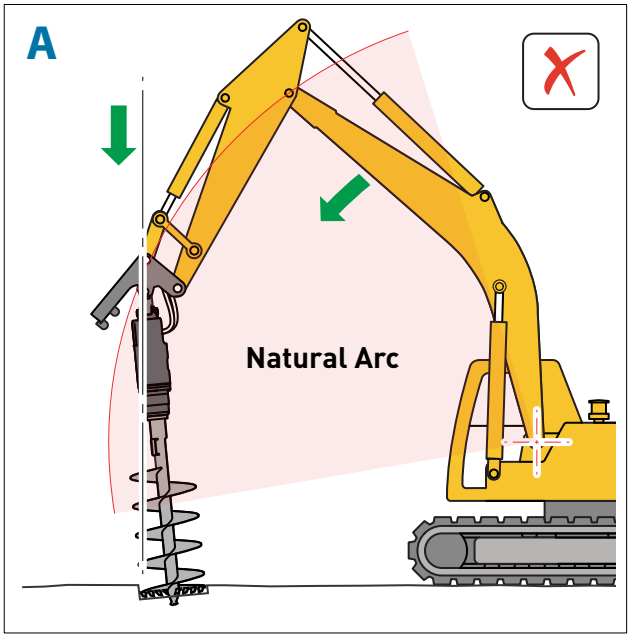

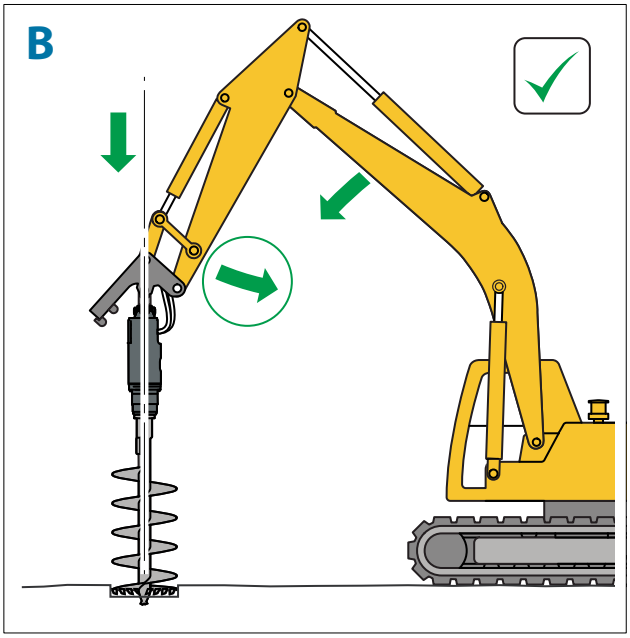

DRILLING WITH FIXED EXTENSIONS

When the required hole depth is greater than the length of the Auger, an Extension should be used. **DO NOT** allow the Earth Drill to enter the hole as seals can be damaged by spoil being extracted.

SAFETY FIRST

Whenever Earth Drill Unit components are being assembled or disassembled from the parent machine **ALWAYS** work in pairs (2 skilled operatives). While fitting components,

ALWAYS check parent machine:

- Is in correct working order
- Is parked correctly on flat ground
- Has its hand brake **ON**, its hydraulic circuit locked out and its engine switched **OFF**.

CHECK that the Extension is the correct model and type to fit the Earth Drill Unit and Auger.
ENSURE that all Earth Drill, Auger and Extension connections are clean before fitting.
USE suitably rated lifting equipment if required.

When using extensions in drilling operations, a length of timber is required for supporting the Auger while removing the Extension. The timber must be of minimum dimensions 150mm (6") deep x 50mm (2") wide and long enough to span the hole being drilled, plus an additional 300mm (12") length at each end.

Fitting A Fixed Extension

When the hole has been drilled to the point where the top of the auger comes within 200mm (8") above ground level;

- Stop drilling.
- Remove the auger from the hole and clear the spoil from the auger.
- Lower the auger back into the hole so that its' weight is supported and remove the Linch Pin and Earth Drill Pin.
- Lift the Earth Drill clear of the Auger and slew it to one side, clear of the hole and set it to a height that will allow the extension to be fitted easily.
- Position the Extension in the vertical work position and support it so that it cannot fall over.
- Position the Earth Drill over the Extension and align the pin holes.
- Lower the Earth Drill Unit onto the Extension.
- Insert the Extension Drive Pin.
- Secure the Extension Drive Pin with Linch Pin.
- Position the Earth Drill and Extension over the Auger and align the pin holes.
- Lower the Earth Drill and Extension onto the Auger.
- Insert the Earth Drill Pin.
- Secure the Earth Drill Pin with Linch Pin.
- Continue drilling.

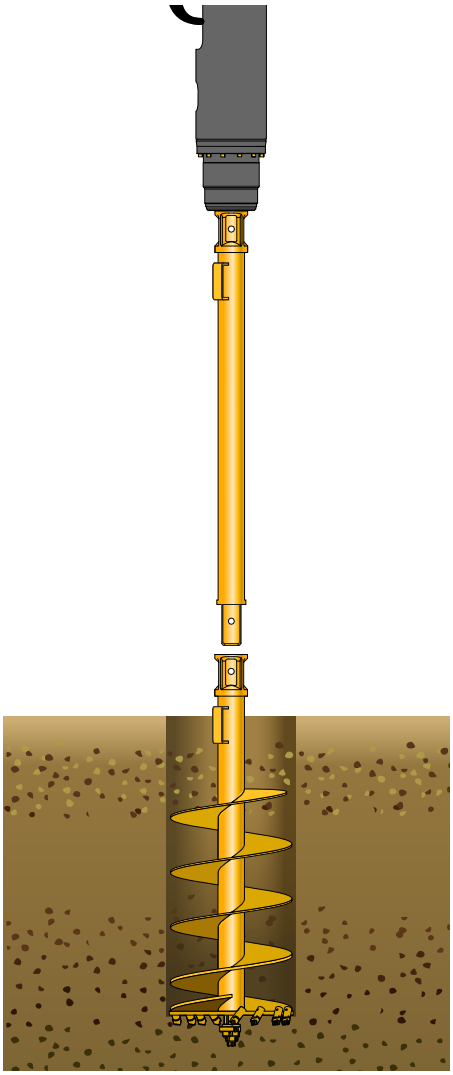

REMOVING A FIXED EXTENSION

If the parent machine has a high reach, it may be possible to lift the auger clear of the hole to clear the spoil without removing the Extension. For smaller machines, and in cases where multiple Extensions are being used, it may be necessary to remove the Extension first.

- Lift the Earth Drill until the Auger Flight is clear of the ground and insert the timber support through the Auger Flight.
- Lower the Earth Drill until the weight of the Auger and Extension are supported by the timber. Make sure that the load is spread equally on either side of the hole.
- Remove the Linch Pin and Earth Drill Pin.
- Lift the Earth Drill until the Extension is clear of the Auger and slew it to one side, clear of the hole and set it to a height that will allow safe removal of the extension.
- Support the weight of the Extension.
- Remove the Linch Pin and Extension Drive Pin.
- Remove the Extension and lay it on the ground.
- Position the Earth Drill over the Auger and align the pin holes.
- Lower the Earth Drill Unit onto the Auger.
- Insert the Earth Drill Pin.
- Secure the Earth Drill Pin with the Linch Pin.
- Lift the Earth Drill to remove the load from the timber support.
- Remove the timber support.

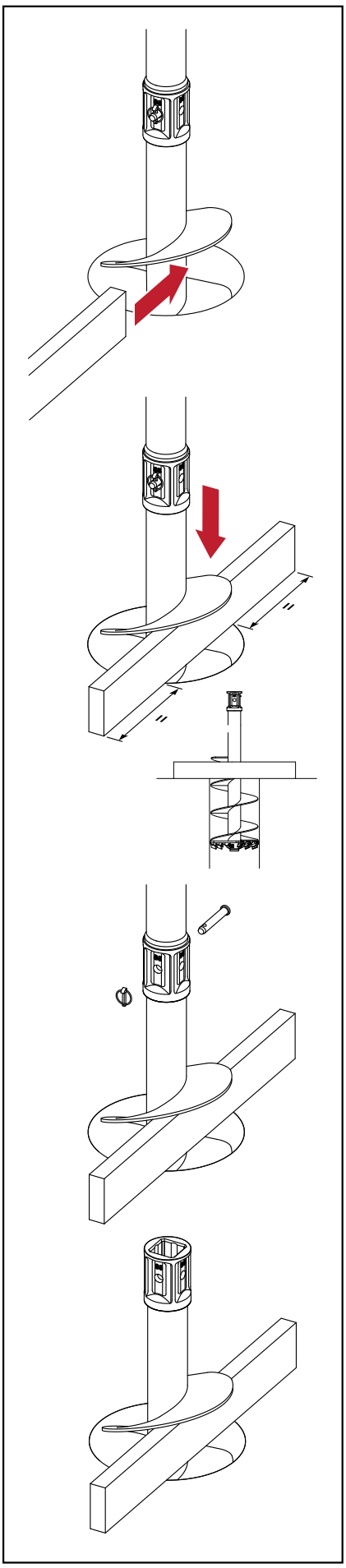

Removing PA Fixed Extensions

If the parent machine has a high reach, it may be possible to lift the auger clear of the hole to clear the spoil without removing the Extension. For smaller machines, and in cases where multiple Extensions are being used, it may be necessary to remove the Extension first.

- Lift the Earth Drill until the Auger Handle is clear of the ground and insert the timber support through the handle.
- Lower the Earth Drill until the weight of the Auger and Extension are supported by the timber. Make sure that the load is spread equally on either side of the hole.
- Remove the Linch Pin and Earth Drill Pin.
- Lift the Earth Drill until the Extension is clear of the Auger and slew it to one side, clear of the hole and set it to a height that will allow safe removal of the extension.
- Support the weight of the Extension.
- Remove the Linch Pin and Extension Drive Pin.
- Remove the Extension and lay it on the ground.
- Position the Earth Drill over the Auger and align the pin holes.
- Lower the Earth Drill Unit onto the Auger.
- Insert the Earth Drill Pin.
- Secure the Earth Drill Pin with the Linch Pin.
- Lift the Earth Drill to remove the load from the timber support.
- Remove the timber support.

Multiple Fixed Extensions

Following the procedures above, multiple fixed Extensions may be added to further increase the hole depth. As with the Auger, each Extension is fitted with a handle through which the timber support can be inserted to support the Extension while adding or removing additional Extensions.

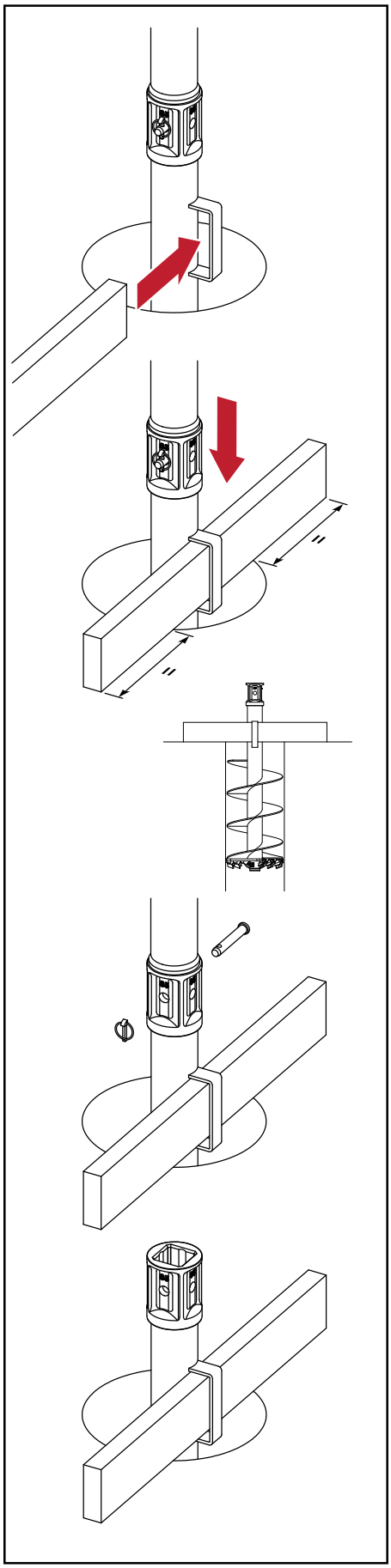

DRILLING WITH TELESCOPIC EXTENSIONS

Telescopic Extensions enable the drilling holes deeper than the Auger length, without the need to remove the Extension to extract the Auger.

DO NOT allow the Earth Drill to enter the hole as seals can be damaged by spoil being extracted.

SAFETY FIRST

Whenever Earth Drill Unit components are being assembled or disassembled from the parent machine **ALWAYS** work in pairs (2 skilled operatives).

While fitting components, **ALWAYS** check parent machine:

- Is in correct working order
- Is parked correctly on flat ground
- Has its hand brake **ON**, hydraulic circuit locked out and its engine switched **OFF**.

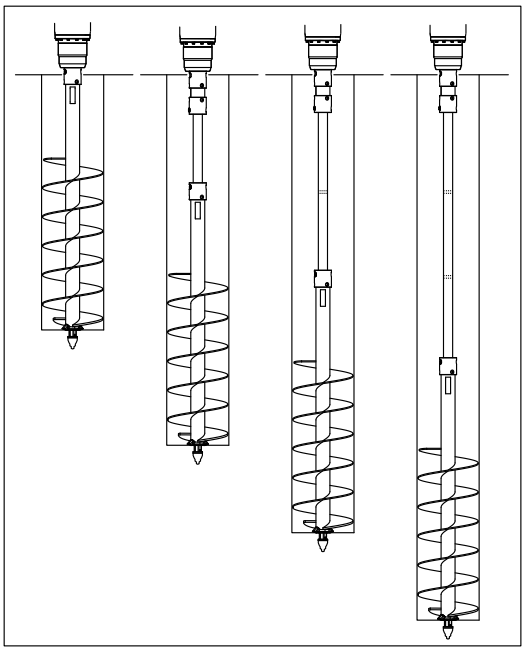

CHECK that the Extension is the correct model and type to fit the Earth Drill Unit and Auger.

ENSURE that all Earth Drill, Auger and Extension connections are clean before fitting.

USE suitably rated lifting equipment if required.

When using Telescopic Extensions in drilling operations, a length of timber is required for supporting the Auger while adjusting the Extension. The timber must be of minimum dimensions 150mm (6") deep x 50mm (2") wide and long enough to span the hole being drilled, plus an additional 300mm (12") length at each end.

NOTE: Minimum auger diameter to be used with a telescopic extension is 300mm.

Fitting A Telescopic Extension

NOTE: The Telescopic Extension Hub is bolted to the Extension Shaft, **DO NOT** remove this bolt. The extension is fixed to the Auger with a pin and linch pin.

The Telescopic Extension can be fitted before drilling commences:

- Insert the Extension into the Auger, ensuring that the pin holes line up.
- Fix the extension to the Auger at the top pin hole (the shortest setting).
- Position the Auger and Extension in the vertical work position and support it so that it cannot fall over.
- Position the Earth Drill over the Auger and Extension align the pin holes.
- Lower the Earth Drill Unit onto the Extension.
- Insert the Extension Drive Pin.
- Secure the Extension Drive Pin with Linch Pin.
- Commence drilling.

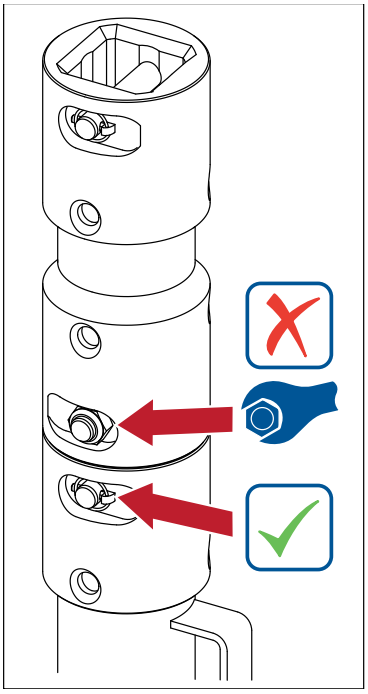

ADJUSTING A TELESCOPIC EXTENSION

To adjust the Extension length:

- Lift the Earth Drill until the Auger Flight is clear of the ground and insert the timber support through the Auger Flight.
- Lower the Earth Drill until the weight of the Auger and Extension are supported by the timber. Make sure that the load is distributed equally on either side of the hole.
- Remove the Linch Pin and Earth Drill Pin.
- Lift the Earth Drill until the desired Extension length is achieved and the holes in the Auger and Extension line up.

NOTE: The shaft of the Telescopic Extension has a red painted portion at the bottom end. When lifting the shaft out to increase the Extension length, the appearance of the red area above the Auger hub indicates that you are approaching the longest setting and the end of the shaft. Careful height adjustment in this area prevents the shaft coming out of the Auger and having to be lined up and re-inserted.

- Insert the Earth Drill Pin.
- Secure the Earth Drill Pin with the Linch Pin.
- Lift the Earth Drill to remove the load from the timber support.
- Remove the timber support.

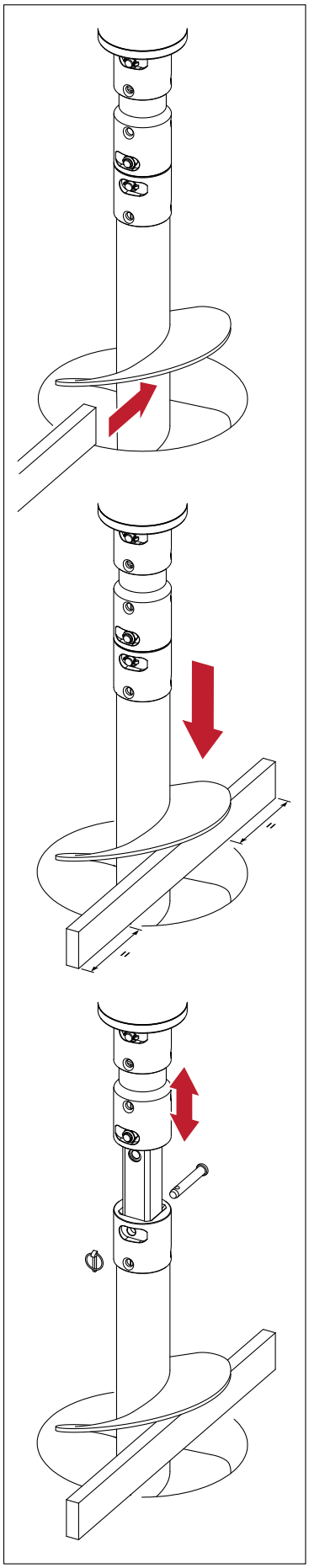

ADJUSTING A PA TELESCOPIC EXTENSION

To adjust the Extension length:

- Lift the Earth Drill until the Auger Handle is clear of the ground and insert the timber support through the handle.
- Lower the Earth Drill until the weight of the Auger and Extension are supported by the timber. Make sure that the load is distributed equally on either side of the hole.
- Remove the Linch Pin and Earth Drill Pin.
- Lift the Earth Drill until the desired Extension length is achieved and the holes in the Auger and Extension line up.

NOTE: The shaft of the Telescopic Extension has a red painted portion at the bottom end. When lifting the shaft out to increase the Extension length, the appearance of the red area above the Auger hub indicates that you are approaching the longest setting and the end of the shaft. Careful height adjustment in this area prevents the shaft coming out of the Auger and having to be lined up and re-inserted.

- Insert the Earth Drill Pin.
- Secure the Earth Drill Pin with the Linch Pin.
- Lift the Earth Drill to remove the load from the timber support.
- Remove the timber support.

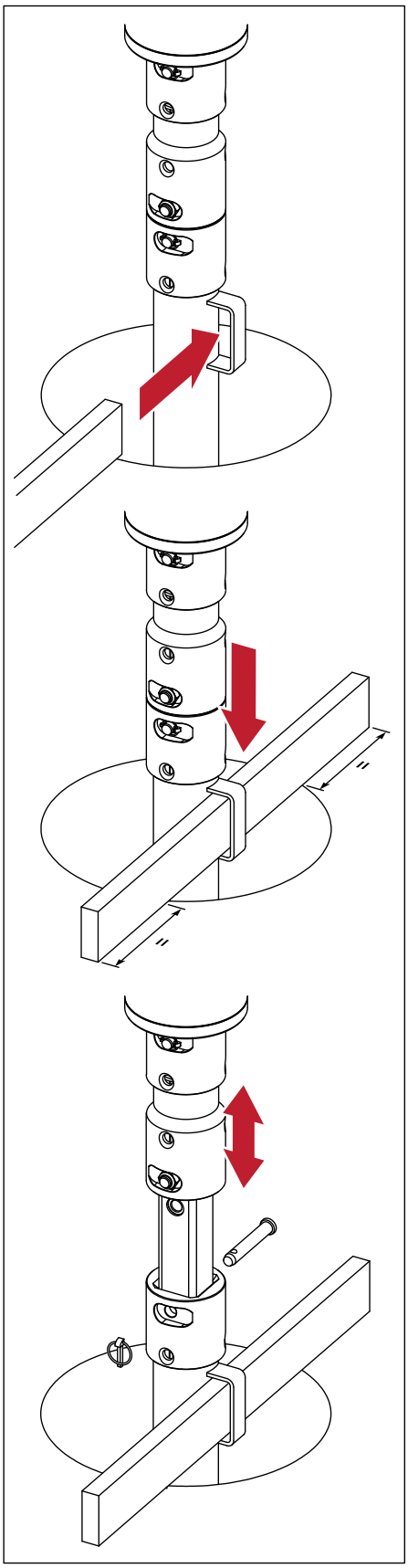

TRANSPORTATION

When attached to the parent machine the standard Auger Unit is free to swing and can be extremely dangerous during transport.

Transportation On Public Highways

ALWAYS remove the Auger and Earth Drill before driving or transporting the parent machine on public highways.
ALWAYS store the Auger and Earth Drill securely and safely when removed from the parent machine taking special care of the hydraulic hoses and connections.

Transportation Within The Job Site

ALWAYS operate the parent machine slowly when on site taking great care to avoid the Auger swinging.
RECOMMENDED: where fitted use the hitch cradle to support the Earth Drill Unit when manoeuvring on site.

Cradle Hitch Support

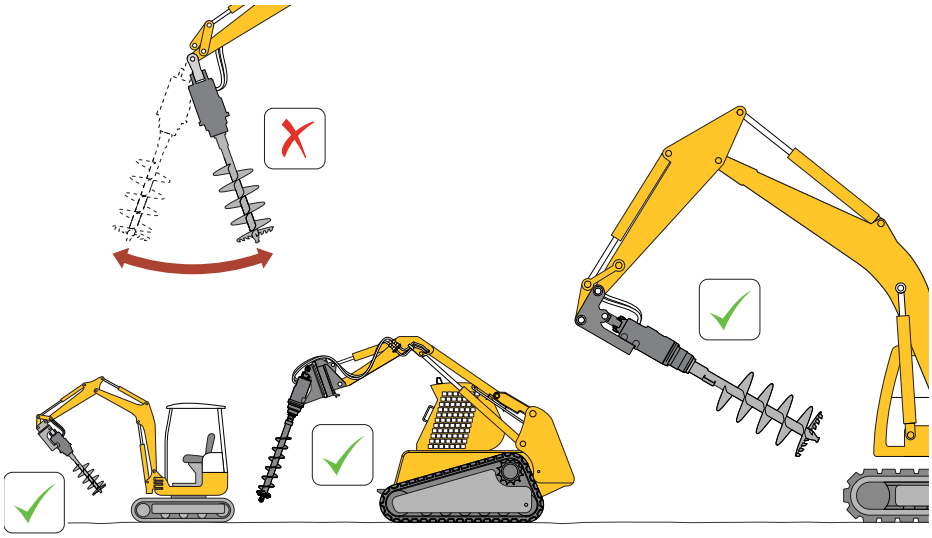

150XHT / 250XHT

It is recommended that the Earth Drill is transported and stored in its Cradle in the horizontal position. The Cradle can be lifted using Lift Forks. When Cradle is in the horizontal position it can be lifted from either side. If the Cradle is in the upright position it should only be lifted from the rear of the Cradle. Before moving the Cradle ensure the Earth Drill is firmly secured to the Cradle by the Drive Pin and Ratchet Straps.

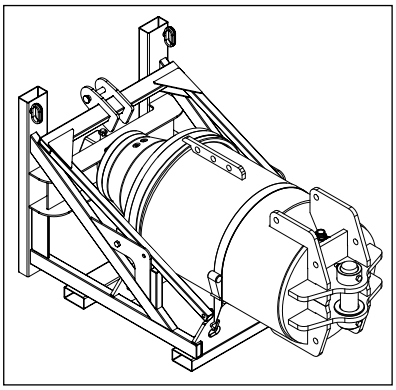

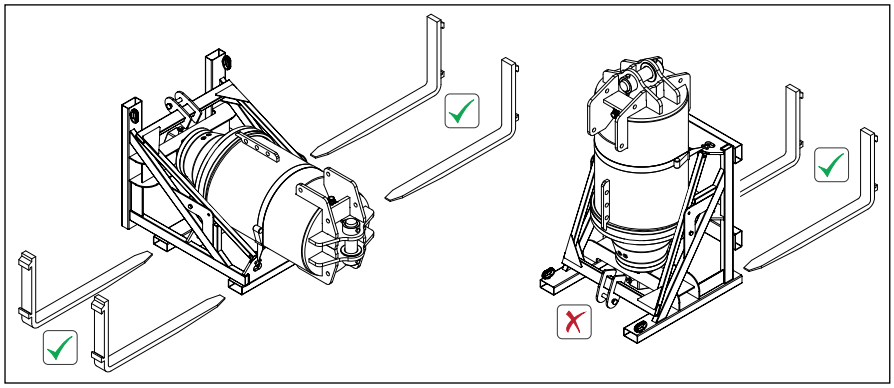

Rope Wind Earth Drill

Whether the vehicle is being moved on public road or on site, the Earth Drill and Auger **MUST** be secured in the **STOWED** position. The unit **MUST** be supported by the Auger Retention Hook **NOT** the Rope.

SAFETY INSTRUCTIONS

Before using the rope to stow the Earth Drill and Auger, **ALWAYS** carry out these safety checks:

ALWAYS:

- Follow safe practices as supplied with your rope
- Store and handle the rope correctly to avoid damage
- Inspect the rope before use, and before storing
- Replace the rope after one years use
- Lift the load steadily to avoid shock loading
- Check all equipment is free from damage
- Regularly inspect the rope for wear and damage

NEVER;

- Exceed safe working load
- Use at temperature exceeding 100 degrees or below -40 degrees
- Expose the rope to chemicals without consulting supplier
- Use if there are any cuts or loose stitching
- Leave the Earth Drill/Auger suspended by the rope

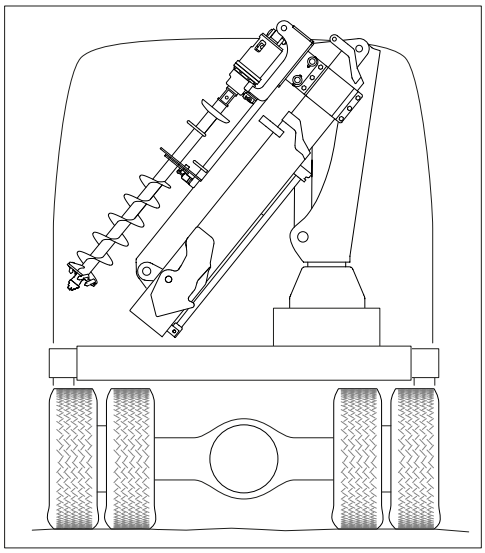

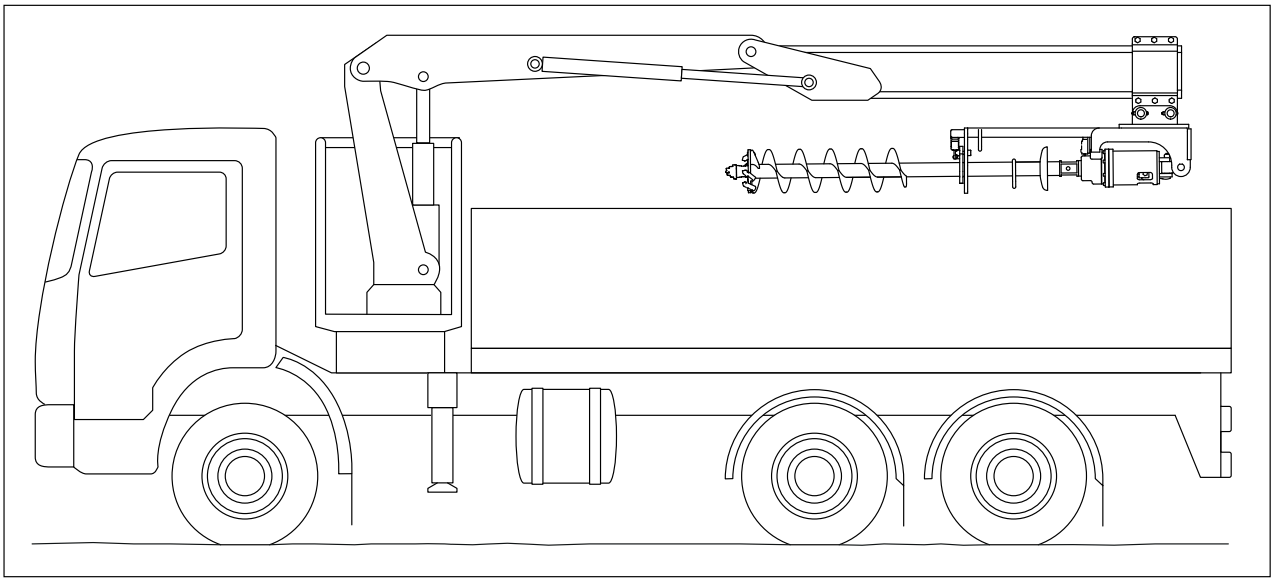

ROPE WIND EARTH DRILL STOWING

Before using the Stowage Rope, **ALWAYS** refer to the **STOWAGE ROPE SAFETY INSTRUCTIONS**

STEP 1 - Attach rope.

NOTE: Only use the supplied rope for stowing the Auger, check that it is in good condition and replace it after one year's use.

A Pass one end of the rope through the attachment loop on the hitch frame.

B Pass the other end of the rope through the loop in the first end and pull tight to secure. Thread the loop on the second end on to the hook on the Auger.

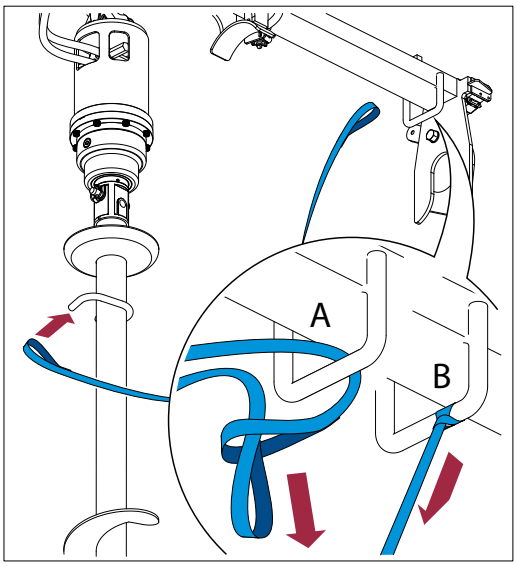

STEP 2 - Retract Earth Drill & Auger

Rotate the Earth Drill in the cutting direction.

The rope will wind around the Auger shaft. When the rope becomes tight, the Earth Drill and Auger will be pulled towards the Stowage Slot.

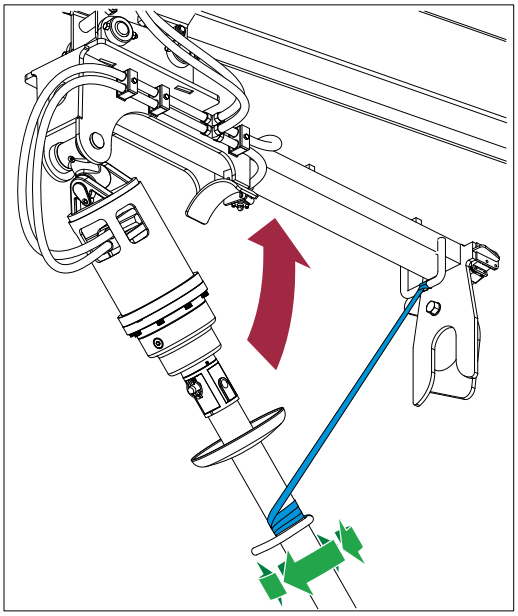

STEP 3 - Stowage position

As the Auger reaches the Stowage Slot, the Auger will automatically operate the Auger retention hook and lock into place.

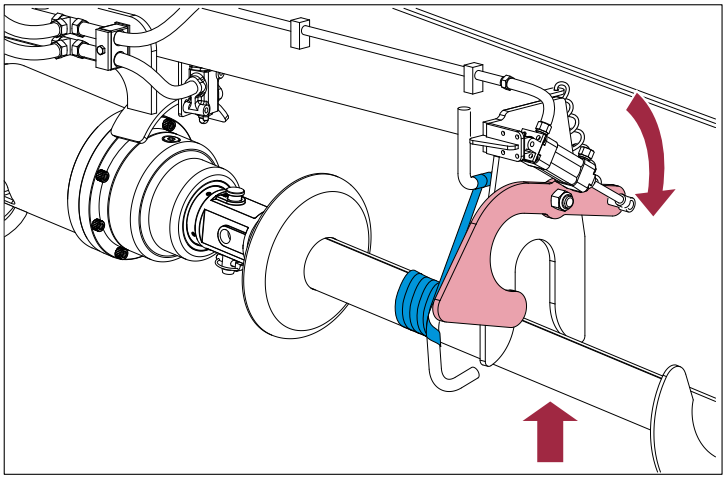

STEP 4 - Secure the Auger

When the Auger reaches its stowed position, the stop valve is operated.

The valve plunger is operated by contact with the Earth Drill output housing when the Auger has reached its maximum height. The valve diverts hydraulic fluid from the Earth Drill motor, stopping Auger rotation.

Check that the Auger Retention Hook has engaged.

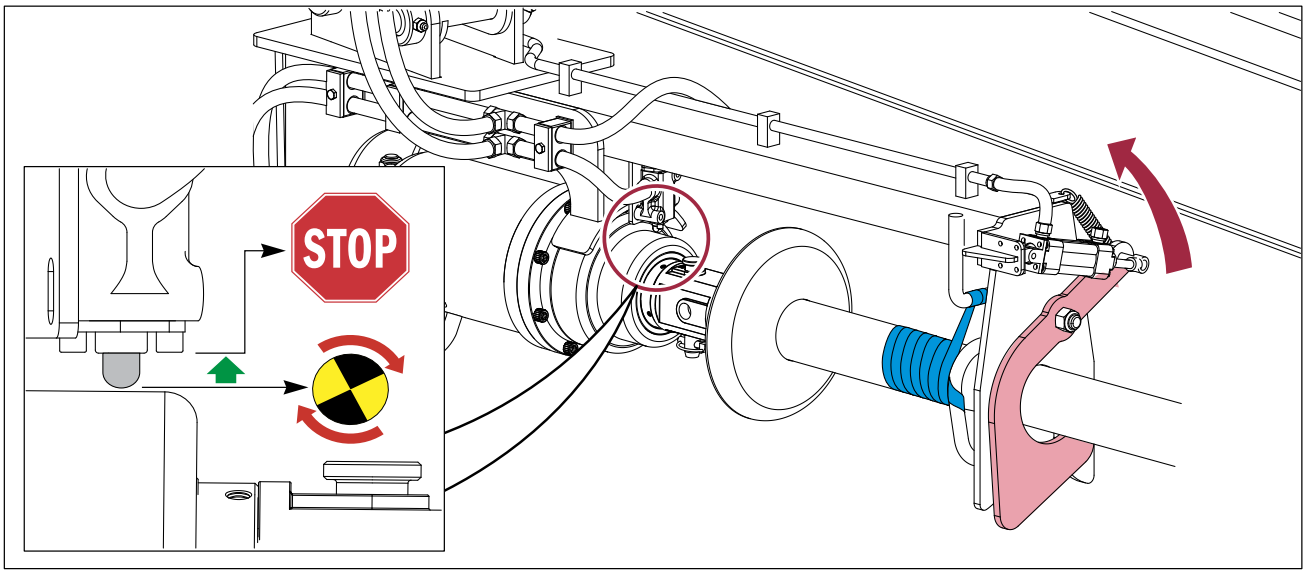

STEP 5 - Release load from rope

With the Auger Retention Hook engaged, reverse the Earth Drill until the rope is slack and the Auger is supported on the Hook.

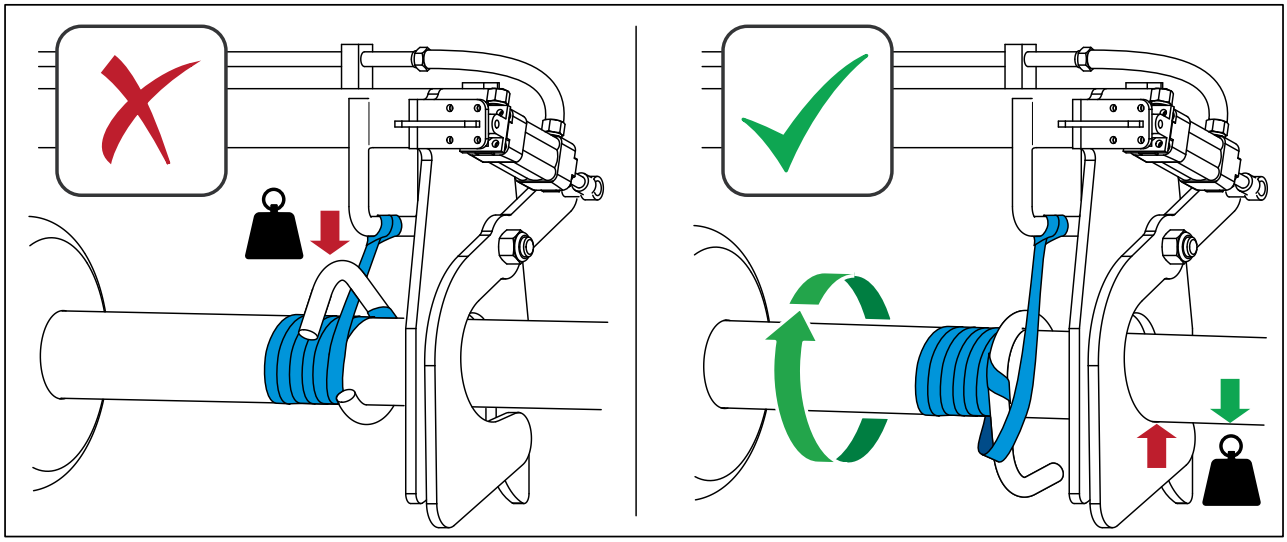

ROPE WIND AUGER DEPLOYMENT

STEP 1 - Rotate the Earth Drill in the cutting direction to apply tension to the rope and lift the Auger clear of the Auger Retention Hook.

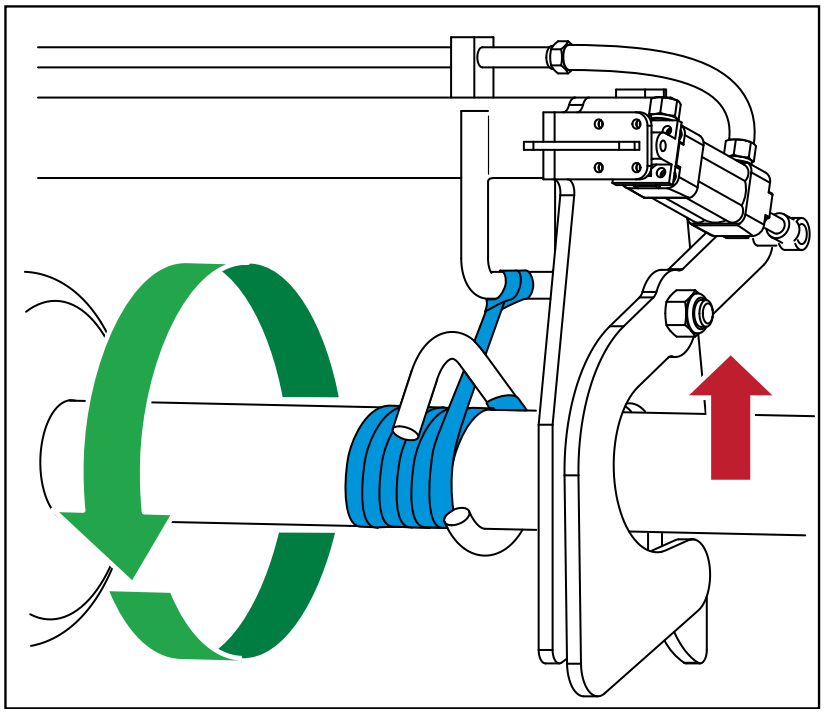

STEP 2 - Press the Auger Retention Hook operating button to release the Hook.

Reverse the Earth Drill to lower the Auger.

Once the Auger is out of the Auger Stowage Slot, release the button and allow the Auger Retention Hook to close.

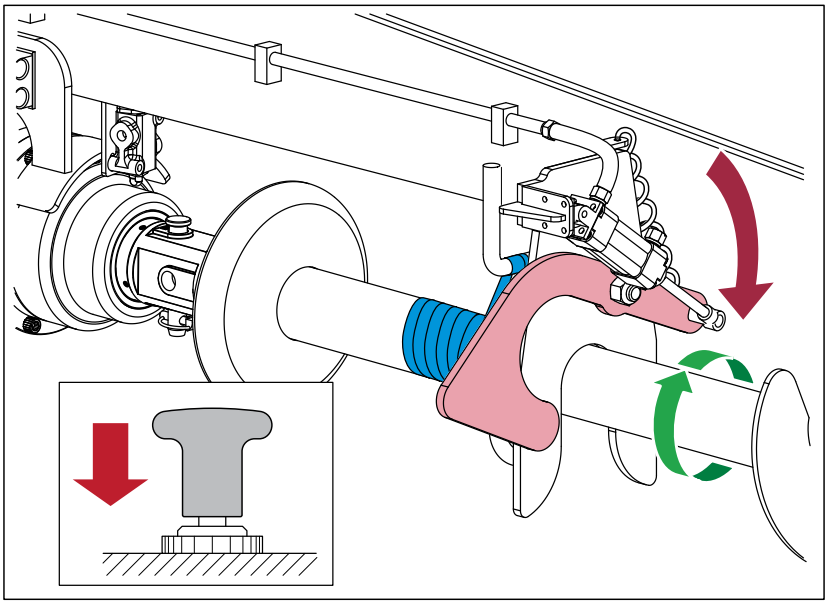

STEP 3 - Keep the Earth Drill rotating in the reverse direction until the Auger hangs vertically.

Stop the Earth Drill.

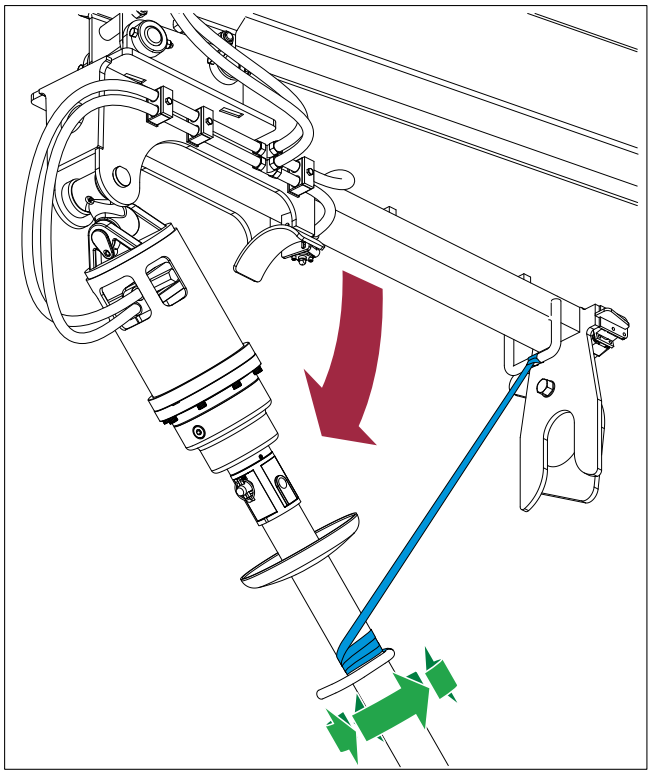

STEP 4 - Remove the rope and stow it safely, away from direct sunlight, moisture and contaminants.

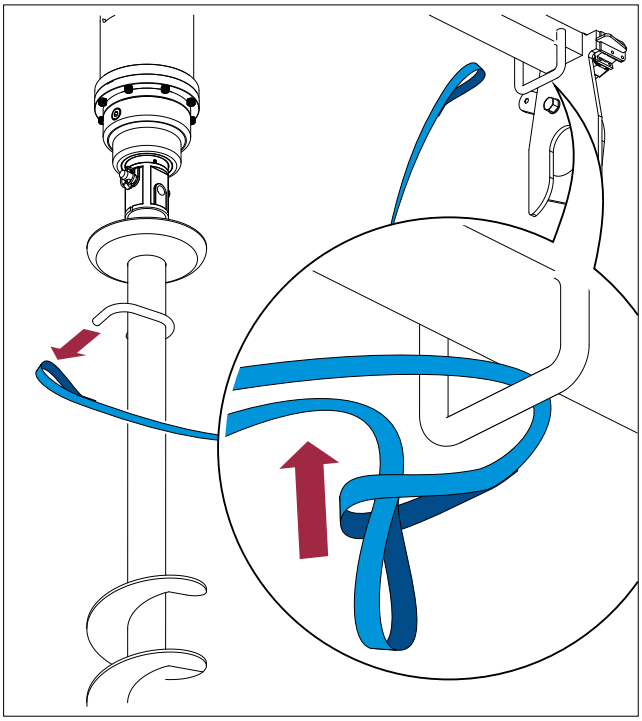

MAINTENANCE & LUBRICATION

SAFETY

Safety at all times

Ensure environmentally safe disposal of waste oil:

Do not pour down drain!

Avoid Fire or Explosion:

Do not smoke near, or expose lubricants to, any possible sources of ignition (e.g. fire, electrical sparks or heat sources.)

All lubricants are toxic and potentially carcinogenic (cancer causing).

Avoid contact with skin and eyes:

Wear suitable protective clothing and gloves.

Always use a suitable barrier cream in case of skin contact.

Always wear eye protection:

In the event of skin contact wash with soap and water.

In the event of eye contact wash with water and seek medical advice.

Do not digest:

If swallowed seek medical advice immediately.

Daily Check For Larger Units

SPECIAL NOTE

This page applies only to models:

17000 - 20000 - 25000 - 30000 - 35000

40000 - 42000 - 50000 - 65000

The following daily check **MUST** be carried out prior to any operation of the Earth Drill unit.

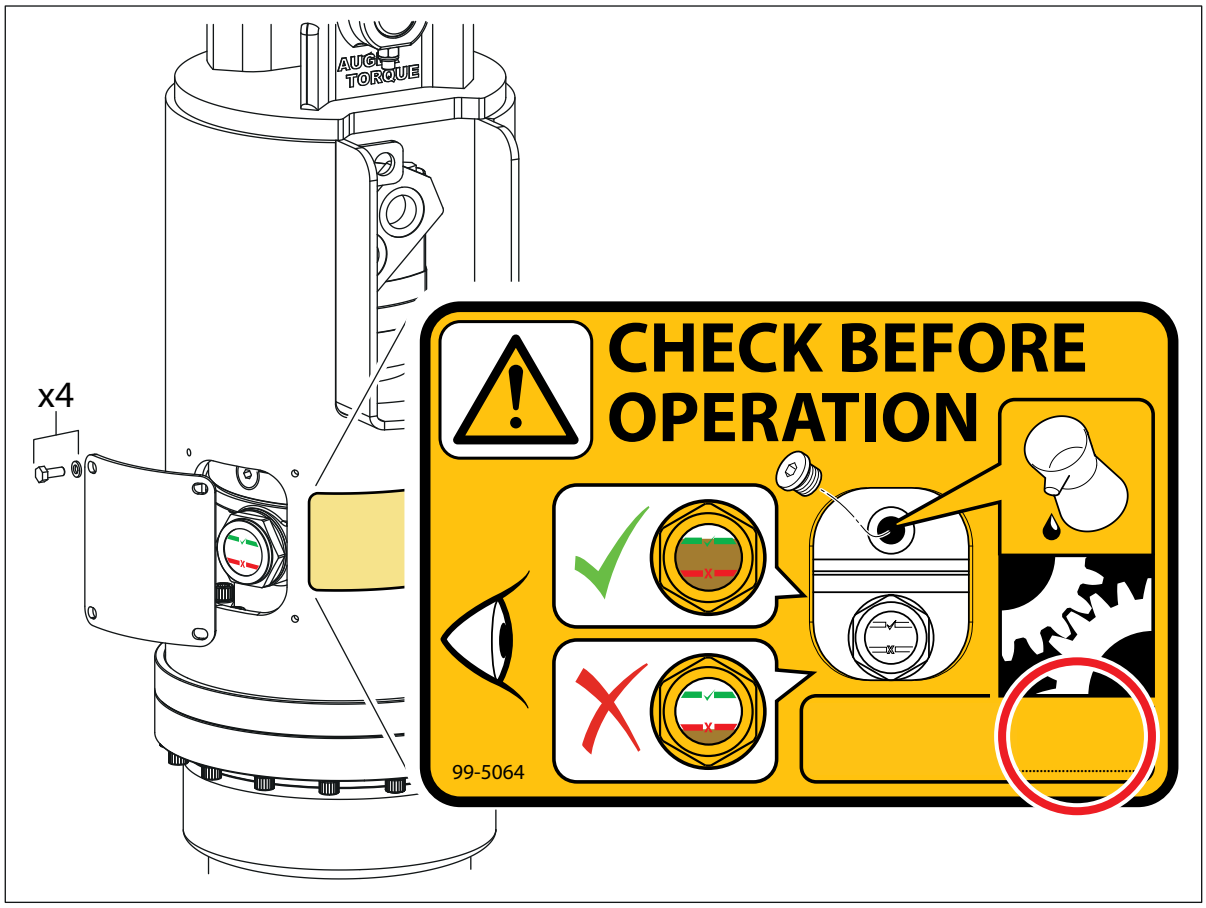

1. With the Earth Drill unit secured in a vertical position. Remove the sight glass guard plate to gain access to the sight glass and check the oil level

2. If the sight glass is fully filled with oil, the unit is filled to an acceptable level.

3. If the sight glass is only partially filled with oil, top up using the oil fill/level point, until the acceptable level is achieved. Ensure that the correct grade of oil is used. This information can be found on the label (shown above) fitted to the Earth Drill unit.

Service Intervals

Your Norm Engineering Earth Drill Unit features a sealed gear housing filled with gear oil to lubricate the planetary gearset components and bearings within the housing.

Norm Engineering Earth Drill Units are low maintenance, however regular checks for oil leaks and following the service schedules are recommended to ensure a trouble free product.

Weekly:

Grease hitch and Earth Drill pivot pins.

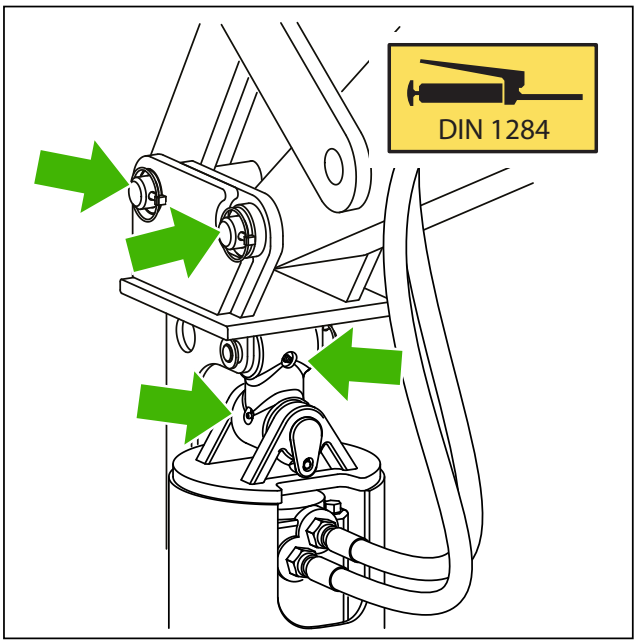

Oil Lubrication

Your Earth Drill has been prefilled with Gear Oil. This oil requires regular changing. Changing the oil at regular intervals will prolong the life of the unit.

Important

To maintain product warranty, your Norm Engineering Dealer MUST record proof of each oil change.

Please have your Earth Drill serviced as specified in the chart on page 51 by an Authorised Norm Engineering service representative.

Make sure that each service is documented in the Service Record section of this manual to ensure product warranty is retained and the product life is extended.

Recommended Oil Change Intervals

Oil change frequency		
Model	First oil change after initial use	Subsequent oil change frequency
1200	3 Months or 200 hours*	12 Months or 800 hours*
X1500	3 Months or 200 hours*	12 Months or 800 hours*
X2000	3 Months or 200 hours*	12 Months or 800 hours*
X2500	3 Months or 200 hours*	12 Months or 800 hours*
ML1500	3 Months or 200 hours*	12 Months or 800 hours*
ML2000	3 Months or 200 hours*	12 Months or 800 hours*
ML2500	3 Months or 200 hours*	12 Months or 800 hours*
3000TC	3 Months or 200 hours*	12 Months or 800 hours*
3000	3 Months or 200 hours*	12 Months or 800 hours*
3500	3 Months or 200 hours*	12 Months or 800 hours*
4500	3 Months or 200 hours*	12 Months or 800 hours*
5000	3 Months or 200 hours*	12 Months or 800 hours*
5500TC	3 Months or 200 hours*	12 Months or 800 hours*
5500	3 Months or 200 hours*	12 Months or 800 hours*
7000TC	3 Months or 200 hours*	12 Months or 800 hours*
7000	2 Months or 120 hours*	12 Months or 800 hours*
8000	2 Months or 120 hours*	12 Months or 800 hours*
10000	2 Months or 120 hours*	12 Months or 800 hours*
12000	2 Months or 120 hours*	12 Months or 800 hours*
15000	2 Months or 120 hours*	12 Months or 800 hours*
17000	1 Month or 50 hours*	4 Months or 200 hours*
20000	1 Month or 50 hours*	4 Months or 200 hours*
25000	1 Month or 50 hours*	4 Months or 200 hours*
30000	1 Month or 50 hours*	4 Months or 200 hours*
35000	1 Month or 50 hours*	4 Months or 200 hours*
40000	1 Month or 50 hours*	4 Months or 200 hours*
42000	1 Month or 50 hours*	4 Months or 200 hours*
50000	1 Month or 50 hours*	4 Months or 200 hours*
65000	1 Month or 50 hours*	4 Months or 200 hours*
150XHT	1 Month or 50 hours*	4 Months or 200 hours*
250XHT	1 Month or 50 hours*	4 Months or 200 hours*

* Whichever time period occurs first.

Oil Change Procedure

Before starting any maintenance work on this unit, read the instructions carefully and ensure you have the correct tools, materials and safety equipment to hand.

NOTE: The procedure described below should be carried out by a competent and proficient engineer.

1. Pre-heat the oil by running the unit for 15 minutes (Fig A). Ensure that the unit is safely supported in a horizontal position, with the fill & drain plugs (Fig B, 1 & 2) at top and bottom of the housing

2. Remove drain & fill plugs using correct tooling and allow oil to drain in to a suitable container for a minimum of 10 minutes. For best results leave to drain overnight.

Refer to page 53 for correct oil grades and quantities

3. Refit drain plug (Fig C, 2) and fill with oil.

4. Refit fill plug (Fig C, 1).

5. Check for signs of leakage, refill as necessary.

Contaminated fluids / oils **MUST** be disposed of in accordance with local environmental regulations.

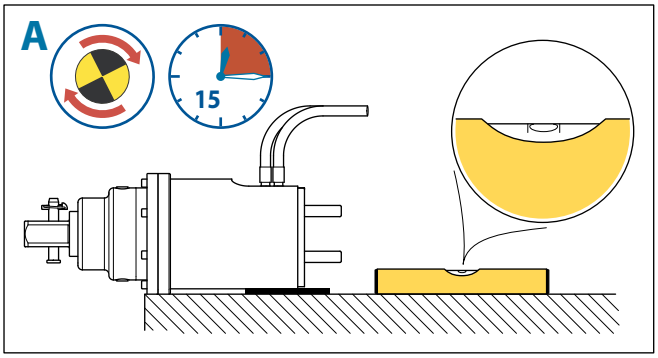

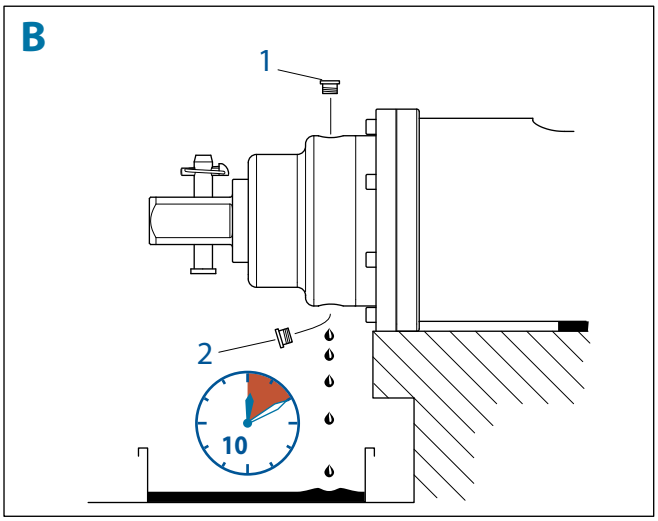

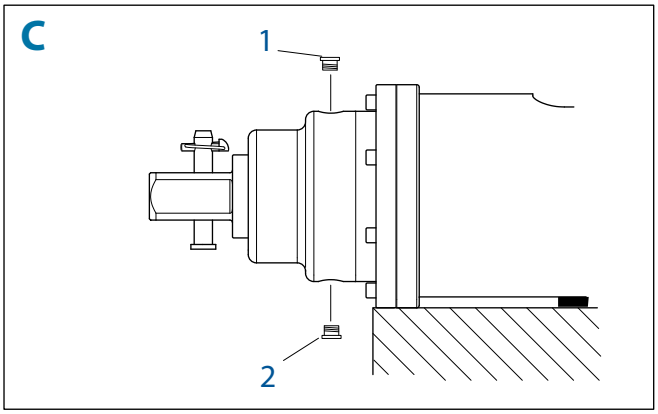

Recommended Lubricants

Model	Oil Quantity ml	Grade	Viscosity	Type
1200	150	Mobil Gear 600XP	320	Mineral
X1500	400	Mobil Gear 600XP	320	Mineral
X2000	400	Mobil Gear 600XP	320	Mineral
X2500	400	Mobil Gear 600XP	320	Mineral
ML1500	400	Mobil Gear 600XP	320	Mineral
ML2000	400	Mobil Gear 600XP	320	Mineral
ML2500	400	Mobil Gear 600XP	320	Mineral
3000TC	850	Mobil Gear 600XP	320	Mineral
3000	850	Mobil Gear 600XP	320	Mineral
3500	850	Mobil Gear 600XP	320	Mineral
4500	850	Mobil Gear 600XP	320	Mineral
5000	1250	Mobil Gear 600XP	320	Mineral
5500TC	1250	Mobil Gear 600XP	320	Mineral
5500	1250	Mobil Gear 600XP	320	Mineral
7000TC	1250	Mobil Gear 600XP	320	Mineral
7000	1250	Mobil Gear 600XP	320	Mineral
8000	1250	Mobil Gear 600XP	320	Mineral
10 000	2150	Mobil Gear 600XP	320	Mineral
12 000	2150	Mobil Gear 600XP	320	Mineral
15 000	2150	Mobil Gear 600XP	320	Mineral
17 000	6750	Mobil Gear 600XP	320	Mineral
20 000	6750	Mobil Gear 600XP	320	Mineral
25 000	6750	Mobil Gear 600XP	320	Mineral
30 000	8000	PAO Mobil SHC	320	Polyglycol
35 000	8000	PAO Mobil SHC	320	Polyglycol
40 000	8000	PAO Mobil SHC	320	Polyglycol
42 000	8000	PAO Mobil SHC	320	Polyglycol
50 000	8800	PAO Mobil SHC	320	Polyglycol
65 000	8800	PAO Mobil SHC	320	Polyglycol
150XHT	58000	PAO Mobil SHC	320	Polyglycol
250XHT	58000	PAO Mobil SHC	320	Polyglycol

All units are supplied with Mobil Gear 600XP viscosity oil unless otherwise requested.
When using or storing the units below -15°C, an ISO150 viscosity oil must be used.
When using or storing units above 35°C, an ISO460 viscosity oil must be used.

Component Wear

The cutting teeth and pilot should be checked regularly for wear.
The diagrams below show acceptable levels of wear.

NOTE: Excessively worn teeth & pilots may cause damage to the Auger

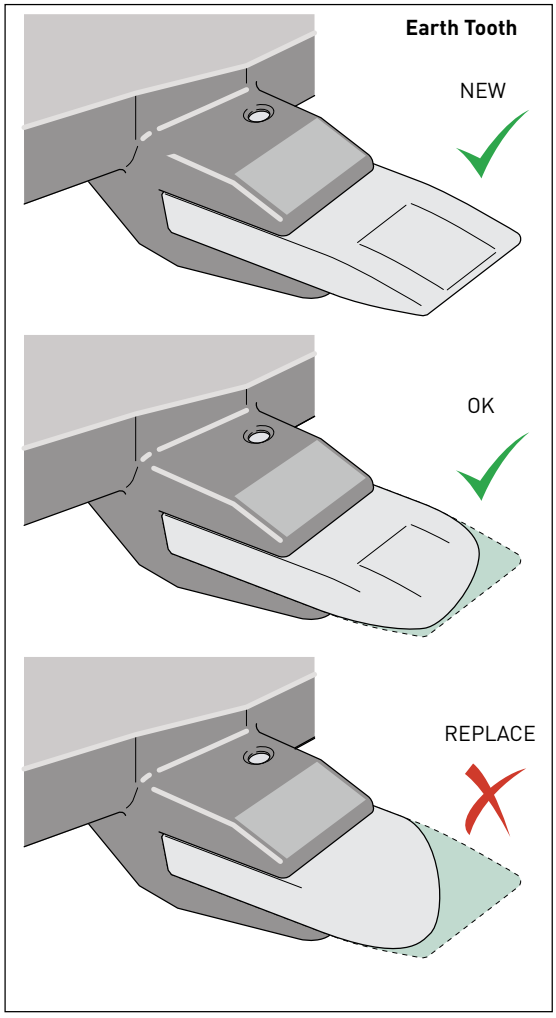

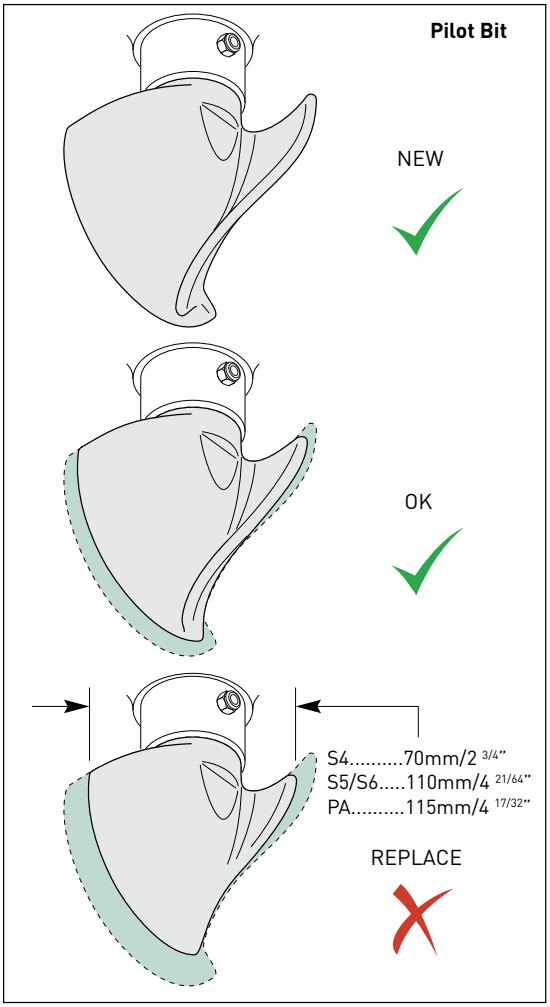

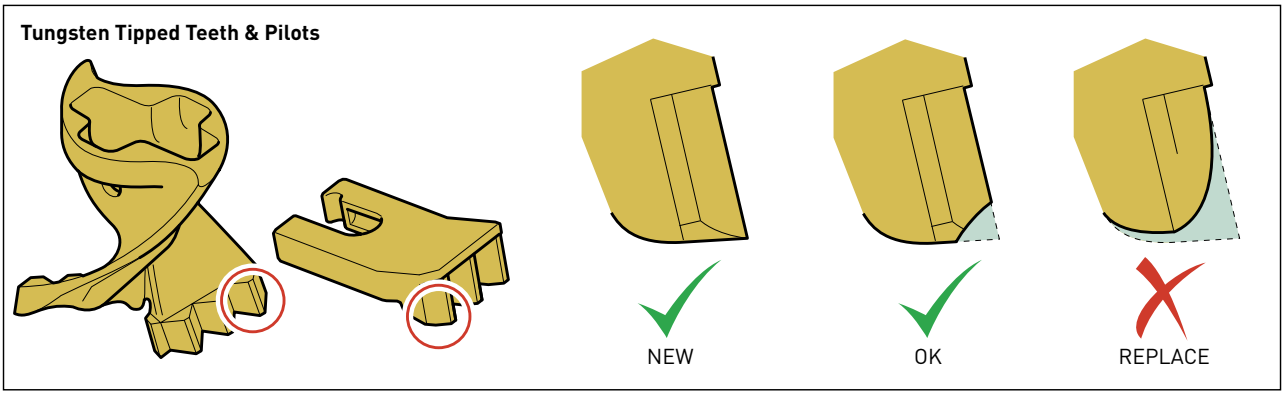

NOTE: Pilots can be replaced by unbolting the old pilot and bolting the new one in its place. For tooth replacement, refer to page 55.

Auger Tooth Replacement

NOTE; Before removing Auger teeth, ensure that the Auger is horizontal and securely supported with the teeth easily accessible. Always wear appropriate protective clothing.

Shock Lock Teeth

Use a 5mm pin punch to drive the retaining pin out through the top of the tooth holder.
The tooth and Shock Lock rubber can then be withdrawn.
To install a replacement Shock Lock tooth, fit the rubber into the slot in the tooth.
Press the tooth and rubber into the tooth holder, ensuring that the cut-out for the pin is on the correct side. You may need to use a soft-faced hammer to drive it in fully.
Insert a new retaining pin into the top of the tooth holder, plain end first.
Drive the pin in, ensuring that it locates in the cut-out in the tooth.
Use a pin punch to make sure that the knurled end of the pin is fully engaged in the hole.

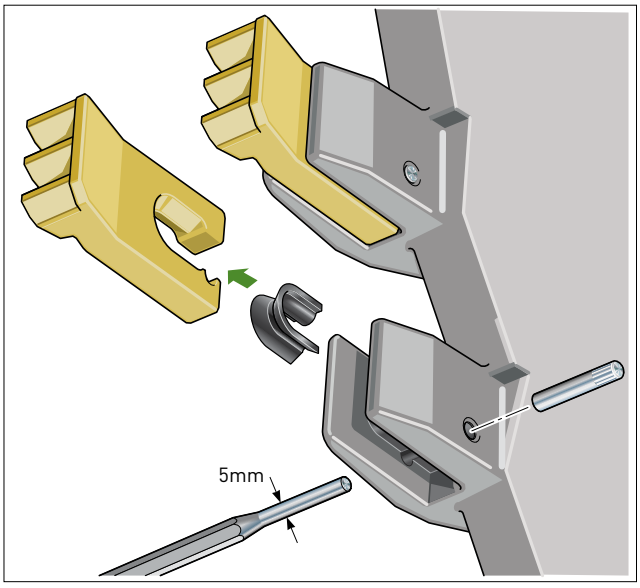

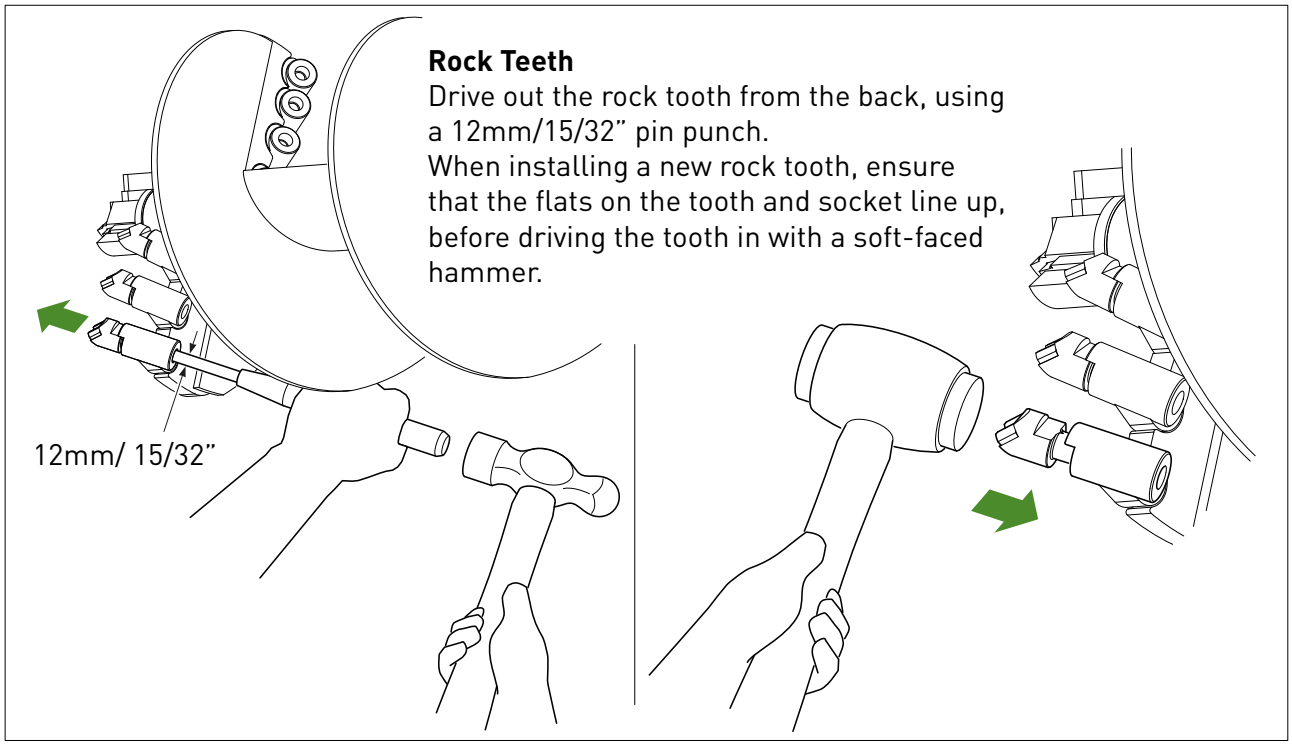

Rock Teeth
Drive out the rock tooth from the back, using a 12mm/15/32" pin punch.
When installing a new rock tooth, ensure that the flats on the tooth and socket line up, before driving the tooth in with a soft-faced hammer.

TROUBLESHOOTING

IF IN DOUBT ASK! - Seek Norm Engineering / parent machine dealer for advice & repair.
BE SAFE - only use genuine Norm Engineering / parent machine spare parts.

MOUNTING FRAME - ASSEMBLY		
FAULT	**POSSIBLE CAUSE**	**ACTION**
Mounting frame does not fit parent machine	Incorrect or non-genuine mounting frame being used	Refer to both this manual and parent machine's operating assembly instructions
	Damaged / worn parts	Repair or replace with genuine mounting frame
MOUNTING FRAME - OPERATION		
FAULT	**POSSIBLE CAUSE**	**ACTION**
Excessive movement in locating pins	Incorrect or worn locating pins	Replace with correct new parts
	Parent machine pin location / linkage frame pin location worn	Seek advice from parent machine dealer
	Damaged parts	Seek advice from Norm Engineering / parent machine dealer. Only use genuine spare parts
EARTH DRILL UNIT - ASSEMBLY		
FAULT	**POSSIBLE CAUSE**	**ACTION**
Earth Drill Unit will not fit mounting frame	Incorrect / incompatible or non genuine mounting frame / Earth Drill Unit	Obtain & fit correct and compatible genuine parts
	Damaged parts	Seek advice from Norm Engineering dealer. Only use genuine spare parts
Excessive movement in locating pins	Incorrect or worn pins	Replace with correct new genuine parts
EARTH DRILL UNIT - OPERATION		
FAULT	**POSSIBLE CAUSE**	**ACTION**
Earth Drill output shaft does not rotate	No oil flow	Check that quick release coupler(s) are correctly engaged to parent machine
		Check that parent machine hydraulic system is operating correctly and has sufficient oil of the correct grade (refer to parent machine operaing instrucions)

EARTH DRILL UNIT - OPERATION		
FAULT	**POSSIBLE CAUSE**	**ACTION**
Earth Drill output shaft does not rotate	Parent machine pressure relief valve faulty or set too low	Test, reset or replace to parent machine's specification
	Earth Drill unit seized	Seek advice from Norm Engineering dealer
	Auger jammed in ground	Remove auger from ground before starting machine
Slow digging speed / slow rotation of Earth Drill output shaft	Insufficient oil flow from parent machine	Check tha parent machine hydraulic system is operating correctly and has sufficient oil of the correct grade
	Incompatible Earth Drill to parent machine combination	Check specification. Seek advice from Norm Engineering dealer
	Incorrect auger, boring teeth or pilot fitted or worn boring teeth/ pilot	Ensure auger size is compatible with Earth Drill Unit (not to large) and that boring teeth/pilot are suitable for he ground conditions and not worn
	Worn Earth Drill hydraulic motor possibly due to incorrect or dirty oil supply	Seek advice from Norm Engineering dealer. Only use genuine spare parts. Change parent machine hydraulic oil and filter **before** fitting replacement drive unit
Auger stalls during work	Parent machine pressure relief valve faulty or set too low	Reset/replace pressure release valve to parent machine's specification
	Restricted oil flow	Check for damaged or incorrect hydraulic hoses and connections
	Blocked hydraulic filter	Change parent machine filter and oil
	Excessive parent machine down force on auger	Reduce down force
	Incompatible Earth Drill / auger size / parent machine combination	Check specification. Seek advice from Norm Engineering dealer

ROPE WIND HITCH		
FAULT	**POSSIBLE CAUSE**	**ACTION**
Rotation doesn't stop when Earth Drill and auger reach top of stowage slot	Poor adjustment of valve	Adjust position of valve
	Faulty valve	Check valve and if necessary, replace
		Check hose connections to valve
Retention hook doesn't open	Auger is supported by hook	Lift auger clear of hook by rotating the Earth Drill
	Faulty air supply	Check air hose to valve, repair or replace as necessary
	Faulty air valve	Check air valve operation, replace as necessary
	Faulty hook operating cylinder	Check cylinder operation, replace as necessary
Retention hook doesn't close	Earth Drill and auger have not reached top of stowage slot	Lift auger to top of stowage slot by rotating the Earth Drill
	Faulty hook operating cylinder	Check cylinder operation, replace as necessary
	Broken return spring	Replace
	Pivot bolt too tight	Check and re-set as necessary

SERVICE RECORD

Ensure that each Earth Drill service is documented in the Service Records below to ensure product warranty is retained and the product life is extended.

Earth Drill Model	
Serial Number	
Make & Model of Parent Machine	
Date of Purchase	

Work carried out - please tick boxes	Date ☐ Hours ☐
Visual Inspection ☐ Oil Change ☐ Lubricant Used ☐ Motor Test ☐ Motor Bolts Torqued ☐ Hood Bolts Torqued ☐ Next Service Date\Hours ☐	Comments\remarks STAMP

Work carried out - please tick boxes	Date ☐ Hours ☐
Visual Inspection ☐ Oil Change ☐ Lubricant Used ☐ Motor Test ☐ Motor Bolts Torqued ☐ Hood Bolts Torqued ☐ Next Service Date\Hours ☐	Comments\remarks STAMP

Work carried out - please tick boxes	Date	Hours
Visual Inspection ☐ Oil Change ☐ Lubricant Used ☐ Motor Test ☐ Motor Bolts Torqued ☐ Hood Bolts Torqued ☐ Next Service Date\Hours ☐	Comments\remarks STAMP	

Work carried out - please tick boxes	Date	Hours
Visual Inspection ☐ Oil Change ☐ Lubricant Used ☐ Motor Test ☐ Motor Bolts Torqued ☐ Hood Bolts Torqued ☐ Next Service Date\Hours ☐	Comments\remarks STAMP	

Work carried out - please tick boxes	Date	Hours
Visual Inspection ☐ Oil Change ☐ Lubricant Used ☐ Motor Test ☐ Motor Bolts Torqued ☐ Hood Bolts Torqued ☐ Next Service Date\Hours ☐	Comments\remarks STAMP	

Work carried out - please tick boxes	Date	Hours
Visual Inspection ☐ Oil Change ☐ Lubricant Used ☐ Motor Test ☐ Motor Bolts Torqued ☐ Hood Bolts Torqued ☐ Next Service Date\Hours ☐	Comments\remarks STAMP	

Work carried out - please tick boxes	Date	Hours
Visual Inspection ☐ Oil Change ☐ Lubricant Used ☐ Motor Test ☐ Motor Bolts Torqued ☐ Hood Bolts Torqued ☐ Next Service Date\Hours ☐	Comments\remarks STAMP	

Work carried out - please tick boxes	Date	Hours
Visual Inspection ☐ Oil Change ☐ Lubricant Used ☐ Motor Test ☐ Motor Bolts Torqued ☐ Hood Bolts Torqued ☐ Next Service Date\Hours ☐	Comments\remarks STAMP	

Work carried out - please tick boxes	Date	Hours
Visual Inspection ☐ Oil Change ☐ Lubricant Used ☐ Motor Test ☐ Motor Bolts Torqued ☐ Hood Bolts Torqued ☐ Next Service Date\Hours ☐	Comments\remarks STAMP	

Work carried out - please tick boxes	Date	Hours
Visual Inspection ☐ Oil Change ☐ Lubricant Used ☐ Motor Test ☐ Motor Bolts Torqued ☐ Hood Bolts Torqued ☐ Next Service Date\Hours ☐	Comments\remarks STAMP	

Work carried out - please tick boxes	Date	Hours
Visual Inspection ☐ Oil Change ☐ Lubricant Used ☐ Motor Test ☐ Motor Bolts Torqued ☐ Hood Bolts Torqued ☐ Next Service Date\Hours ☐	Comments\remarks STAMP	

Work carried out - please tick boxes	Date	Hours
Visual Inspection ☐ Oil Change ☐ Lubricant Used ☐ Motor Test ☐ Motor Bolts Torqued ☐ Hood Bolts Torqued ☐ Next Service Date\Hours ☐	Comments\remarks STAMP	

Work carried out - please tick boxes	Date	Hours
Visual Inspection ☐ Oil Change ☐ Lubricant Used ☐ Motor Test ☐ Motor Bolts Torqued ☐ Hood Bolts Torqued ☐ Next Service Date\Hours ☐	Comments\remarks STAMP	

Work carried out - please tick boxes	Date	Hours
Visual Inspection ☐ Oil Change ☐ Lubricant Used ☐ Motor Test ☐ Motor Bolts Torqued ☐ Hood Bolts Torqued ☐ Next Service Date\Hours ☐	Comments\remarks STAMP	

Work carried out - please tick boxes	Date	Hours
Visual Inspection ☐ Oil Change ☐ Lubricant Used ☐ Motor Test ☐ Motor Bolts Torqued ☐ Hood Bolts Torqued ☐ Next Service Date\Hours ☐	Comments\remarks STAMP	

Work carried out - please tick boxes	Date	Hours
Visual Inspection ☐ Oil Change ☐ Lubricant Used ☐ Motor Test ☐ Motor Bolts Torqued ☐ Hood Bolts Torqued ☐ Next Service Date\Hours ☐	Comments\remarks STAMP	

Work carried out - please tick boxes	Date	Hours
Visual Inspection ☐ Oil Change ☐ Lubricant Used ☐ Motor Test ☐ Motor Bolts Torqued ☐ Hood Bolts Torqued ☐ Next Service Date\Hours ☐	Comments\remarks STAMP	

WARRANTY STATEMENT

Norm Engineering provide a LIFETIME parts replacement warranty on the dislodgement of the Earth Drill shaft and any failure of the Shock Lock system to prevent loss of teeth under normal operating conditions.

All Norm Engineering products are warranted to be free from defects in materials or workmanship for the periods summarised below:

- Planetary Gearbox Components - 72 Months
- Hydraulic Motors - 36 Months
- All Other Parts / Products - 12 Months

The warranty periods will commence from Date of Sale by an authorised Norm Engineering Dealer. Evidence of the date of sale may be required and for Planetary and Hydraulic Motor warranties to be valid the product must be registered with Norm Engineering within 4 weeks of the date of sale. Extended Warranty (> 12 months) Products can be registered by returning the Registration Card or completing the form on page 7. This warranty is not transferable beyond the initial purchaser of the product.

A warranty claim should be reported to the Norm Engineering Dealer who supplied the unit. The Dealer, with the technical backup of Norm Engineering, will make an initial assessment.

The customer is responsible for returning the product for warranty inspection to the original supplying dealer's facility. Parts should not be delivered without the prior agreement of the dealer or Norm Engineering.

During the warranty period Norm Engineering, at its option, will repair or replace any parts free of charge determined as defective by Norm Engineering. Such repairs will be undertaken by Norm Engineering or its nominated representative at an Norm Engineering facility or a location deemed suitable by Norm Engineering. Norm Engineering are not liable for any associated costs relating to a warranty failure.

Parts repaired or replaced by Norm Engineering are then covered by this warranty for the remainder of the original warranty as if such parts were original parts.

Products or parts which, as determined by Norm Engineering's examination, show wear from normal use, have been improperly operated, damaged by accident or negligence, altered or modified are not considered defective and are not covered by this warranty.

This warranty is void if any attempt is made to make field repairs unless these have been pre-approved in writing by Norm Engineering.

This warranty is void if the products are not serviced in-line with the instructions in the Operators Manual. Particular care should be taken to perform regular oil changes in gearboxes.

This warranty is exclusive and in-lieu of any other expressed warranties. There are no warranties of merchantability or fitness for a particular purpose. Norm Engineering shall not be liable for any consequential, incidental or punitive damages, losses or expenses, including those resulting from or caused by any defects.

As you would expect from Norm Engineering, with our extensive experience and product reliability we'll always go the extra mile to keep you working.

Notes

Notes

NORM ENGINEERING

YOUR DEALER IS

Norm Engineering (QLD)

787 Boundary Rd,
Darra,
Brisbane, QLD 4076,
Australia.
Ph:+61 (07) 3376 3177
Email: Sales@normeng.com.au

Norm Engineering (VIC)

2/45 Frankston Gardens Dr,
Carrum Downs,
Victoria 3201,
Australia.
Ph: +61 (03) 9775 1965
Email: vicadmin@normeng.com.au